E-350=15 2501

KITZ

# B/F Series
# Pneumatic Actuators

KITZ CORPORATION

## Contents

**B Series Pneumatic Actuators**
Features of KITZ B Series Pneumatic Actuators ..... 1
Specifications and Dimensions ..... 3
Cylinder Volume and Air Supply Requirements ..... 5
Air Piping for Actuators ..... 7
Construction Details..... 8
Actuator Sizing ..... 15
Optional Accessories ..... 16
**F Series Pneumatic Actuators**
Features of KITZ F Series Pneumatic Actuators..... 17
Specifications and Dimensions ..... 19
Operating Mechanism ..... 20
Actuator Sizing ..... 21
Construction Details..... 23
Optional Accessories ..... 23
Valve and Actuator Handling Instructions ..... 24
Precautions ..... 24

The products introduced in this catalog are all covered by the ISO 9001 Certification awarded KITZ Corporation in 1989, the earliest in the valve industry in Japan.

## Foreword

Pneumatic actuators are generally recommended because they simplify piping arrangements and minimize environmental pollution problems. These are advantageous features when compared with hydraulically operated actuators. Also, unlike electric actuators, care required for inflammable or explosive servicing environments is much less when pneumatic actuators are installed.
Application of pneumatic actuators has grown dramatically in recent days for their cost and energy saving advantages. KITZ proudly introduces B/F Series pneumatic actuators which are readily mountable on all KITZ ball and butterfly valves. Ball and butterfly valves constructed similarly to KITZ valves may also be satisfactorily operated with KITZ pneumatic actuators.

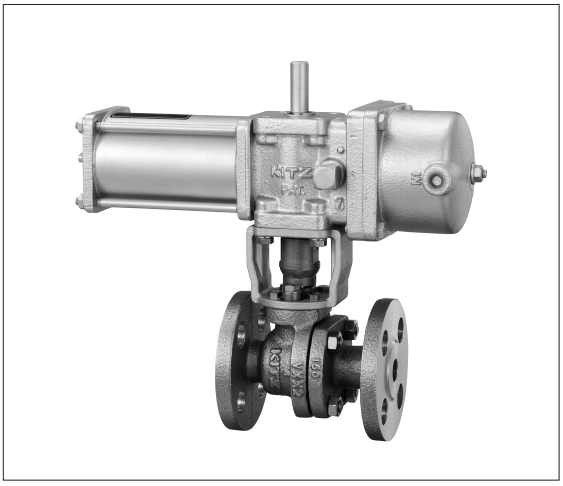

KITZ Ball Valve with Type BS Actuator

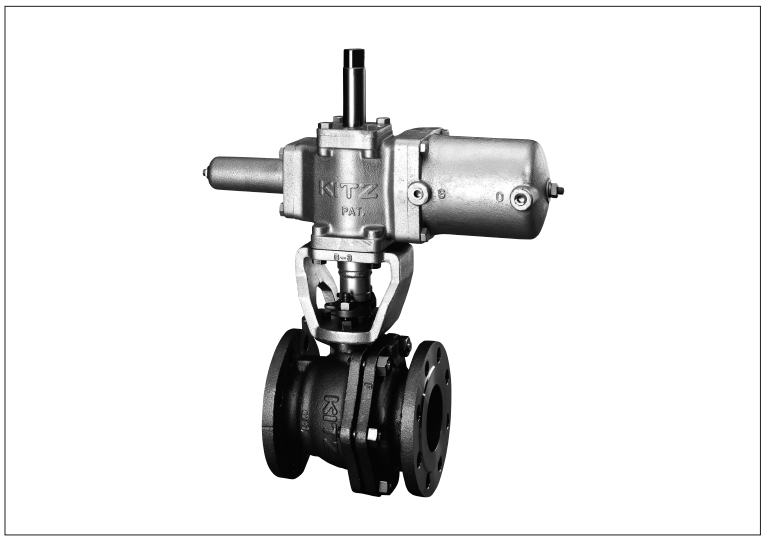

KITZ Ball Valve with Type B Actuator

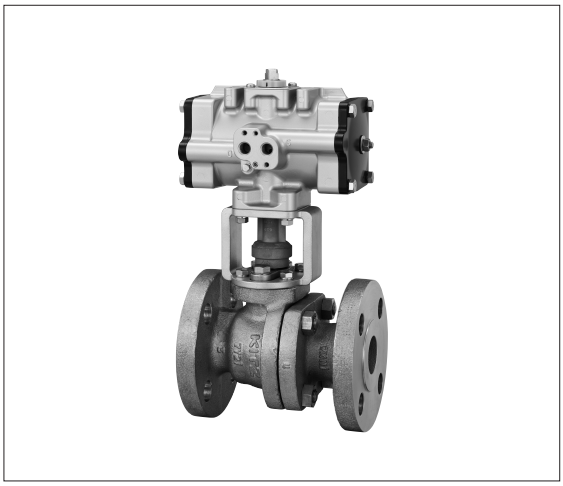

KITZ Ball Valve with Type FA Actuator

# Features of KITZ B Series Pneumatic Actuators

Internationally patented

## Type B (Double-Action)

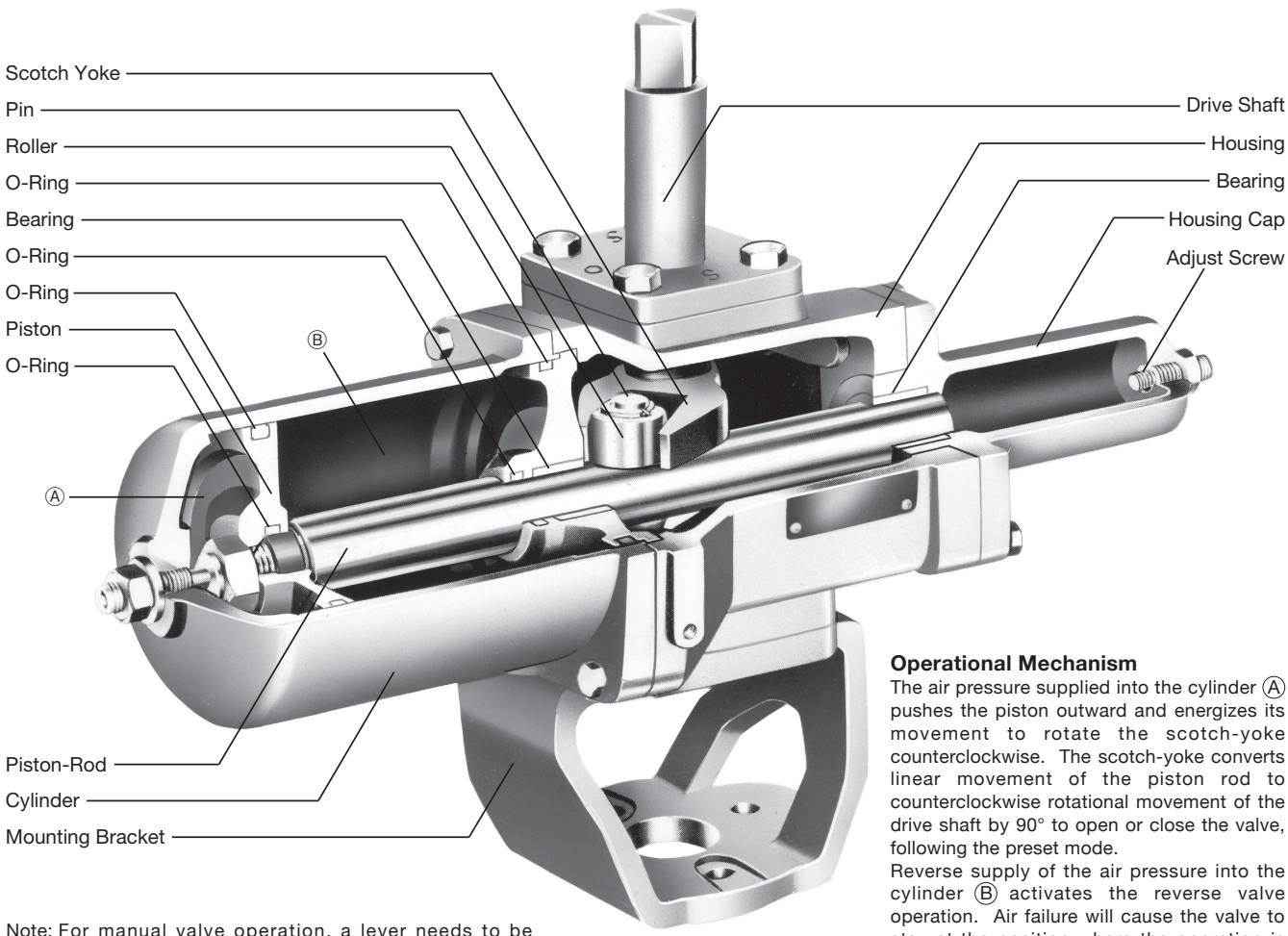


**Operational Mechanism**
The air pressure supplied into the cylinder Ⓐ pushes the piston outward and energizes its movement to rotate the scotch-yoke counterclockwise. The scotch-yoke converts linear movement of the piston rod to counterclockwise rotational movement of the drive shaft by 90° to open or close the valve, following the preset mode.
Reverse supply of the air pressure into the cylinder Ⓑ activates the reverse valve operation. Air failure will cause the valve to stay at the position where the operation is disturbed, unlike the valve driven by Type BS or BWS actuator.

Note: For manual valve operation, a lever needs to be mounted on the top end of the drive shaft of Type B-1 through B-4 actuators. Separate manual operators are available for Type B-5 and B-6 actuators.

### Smooth operation with minimum friction
Extensive use of fluorocarbon resin to coat inside parts of the actuator reduces friction to a minimum for smooth operation. This includes the inside of the cylinder, resulting in smooth sliding of the piston and O-rings, as well as the surfaces of driving shaft, piston rod, and all bearings. As a result, the actuator features long-term stable operation.

### Simple, trouble-free construction
The number of parts has been minimized to reduce mechanical problems and simplify periodical check, maintenance, disassembly, or reassembly.

### Separated turning mechanism and cylinder
Unlike conventional designs, in which the cylinder drive transmission mechanism is incorporated in the cylinder itself, the transmission mechanism of KITZ B Series actuators is designed with a scotch yoke installed separately from the cylinder.

This construction prevents air leakage even when the shaft clearance has increased during service.

### Drive characteristics suited to quarter-turn valves
Unlike conventional cylinder actuators deploying linear drive characteristics, use of a scotch yoke mechanism provides a U-shape curve which maximizes the force obtained at the start and end areas of each stroke. This performance curve is similar to the torque characteristics of ball and butterfly valves in general, making KITZ B Series actuators suitable for such quarter-turn valves.

### Installation of accessories
The actuator housing is provided with an arrangement for mounting limit switches and valve positioners, etc. on its top, and solenoid valves, air filters, and regulators, etc. on its side.

Internationally patented

## Type BS (Spring-Return)
## Type BSW (Spring-Return with Manual Operation Device)

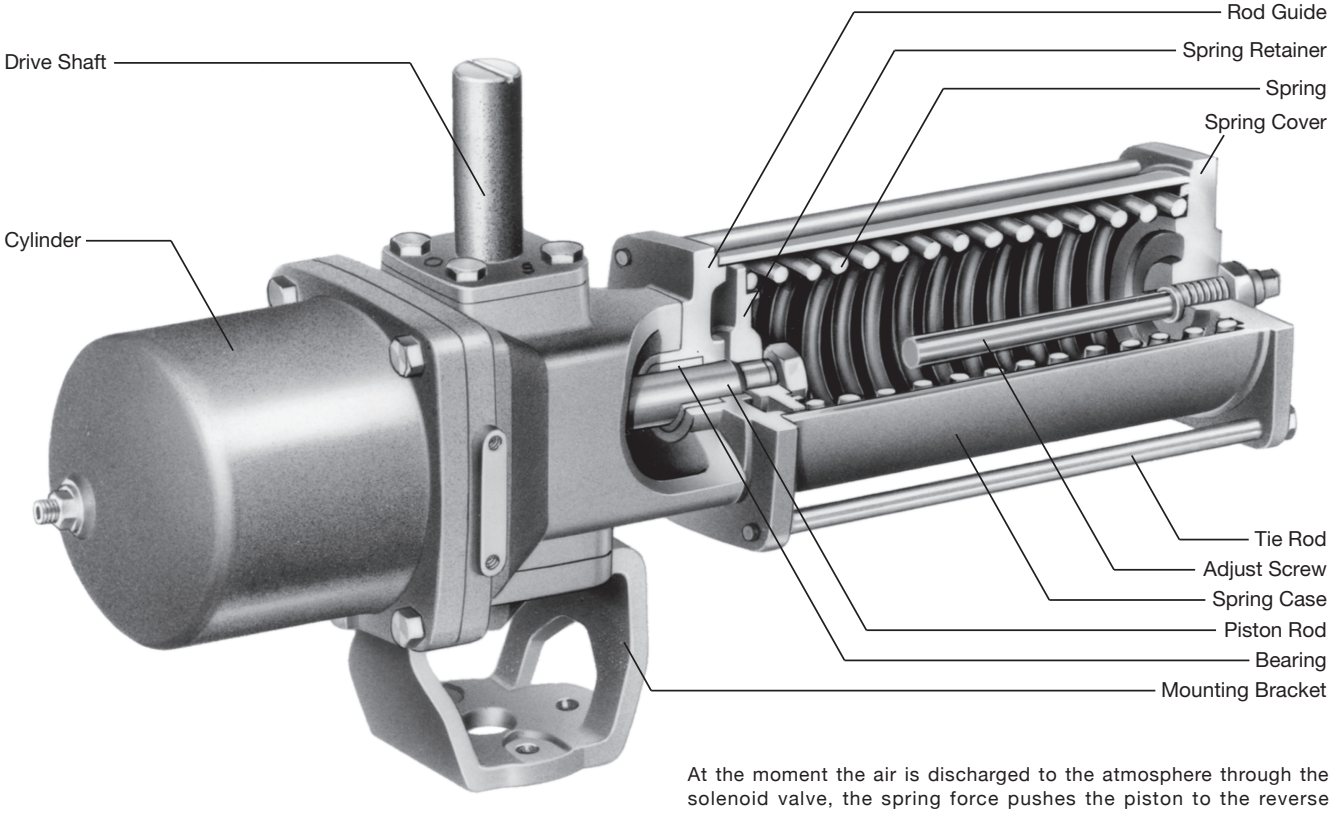


### Operational Mechanism

The air pressure supplied into the cylinder pushes the piston outward and energizes its movement to rotate the scotch-yoke counterclockwise, compressing the spring. The scotch-yoke converts linear movement of the piston rod to counterclockwise rotational movement of the drive shaft by 90°, to open or close the valve, following the preset mode.

At the moment the air is discharged to the atmosphere through the solenoid valve, the spring force pushes the piston to the reverse direction, and the scotch-yoke activates clockwise rotation of the shaft to reversely operate the valve. Air failure will cause the valve to return to the original open or closed position automatically, following the preset mode, unlike the valve driven by Type B actuator.
The BSW actuator is driven with the same mechanism as Type BS, but provided with a handwheel for manual operation. Please bear it in mind that the handwheel must be **factory mounted**.

### Type B Actuator Output Torque

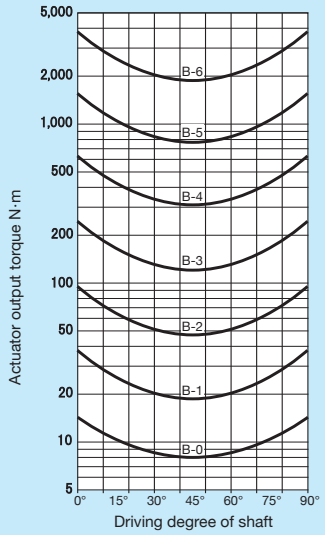


### Type BS/BSW Actuator Output Torque

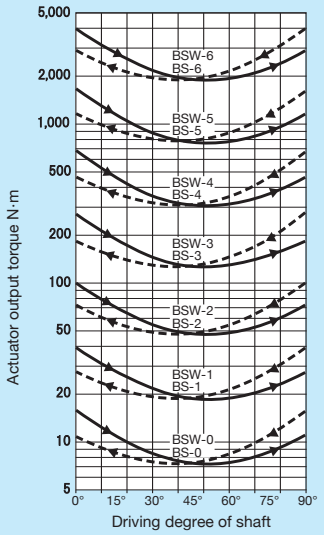


— Output torque when air pressure is supplied.
- - - Output torque caused by spring force when air pressure is exhausted.

Operating pressure:
0.4 MPa

# Specifications and Dimensions

| | | |
|---|---|---|
| Operating media | : | Compressed instrument air |
| Standard operating pressure | : | 0.4 MPa: factory preset pressure |
| Pressure supply range | : | 0.3 MPa to 0.7 MPa* |
| Output torque | : | Refer to Page 2 |
| Standard durability | : | 100,000 cycles under moderate service conditions |
| Cylinder test pressure | : | 0.97 MPa |
| Drive shaft rotation | : | 90°±5° |
| Service temperature range | : | –20°C to +60°C (Supplied air should not be frozen.) |
| Safety Integrity Level (SIL) | : | IEC 61508-2010 SIL 2 or 3 capable |

* Be consutled by KITZ for non-standard operating pressure.

## Type B (Double-Action)

### Type B-0 to B-5

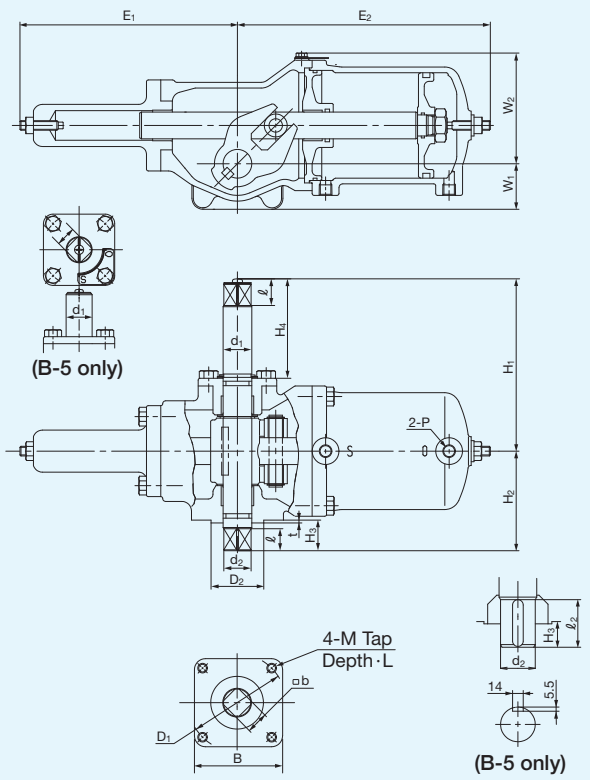


### Type B-6

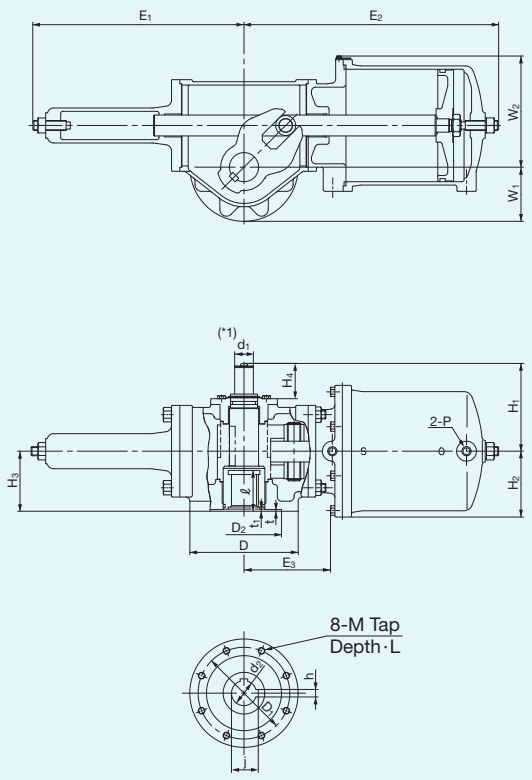


※ The operating lever cannot be mounted on the drive shaft of Type B-5 and B-6 actuators.
※ $E_1$ & $E_2$ dimention can be different from the list depending on actual Adjusting.

## Type B Actuator Dimensions

unit: mm

| Type | $E_1$ | $E_2$ | $E_3$ | $W_1$ | $W_2$ | $H_1$ | $H_2$ | $H_3$ | $H_4$ | D | $D_1$ | $D_2$ | $d_1$ | $d_2$ | b | B | ℓ | t | $t_1$ | P | L | M | h | j |
|---|---|---|---|---|---|---|---|---|---|---|---|---|---|---|---|---|---|---|---|---|---|---|---|---|
| B-0 | 92 | 111 | — | 25 | 54 | 75 | 53 | 18 | 40 | — | 50 | 35 | 12 | 15 | 12 | 50 | 12 | 2 | — | BSPT1/8 | 9 | M6 | — | — |
| B-1 | 128 | 154 | — | 25 | 81 | 140 | 60 | 18 | 94 | — | 50 | 35 | 16 | 15 | 12 | 50 | 12 | 2 | — | BSPT1/4 | 9 | M6 | — | — |
| B-2 | 177 | 205 | — | 35 | 89 | 153 | 77 | 23 | 99 | — | 70 | 55 | 22 | 21 | 17 | 70 | 17 | 2 | — | BSPT1/4 | 12 | M8 | — | — |
| B-3 | 235 | 272 | — | 48 | 116 | 180 | 104 | 32 | 104 | — | 102 | 70 | 30 | 28.5 | 23 | 95 | 23 | 3 | — | BSPT1/4 | 15 | M10 | — | — |
| B-4 | 289 | 333 | — | 57 | 149 | 230 | 138 | 43 | 127 | — | 125 | 85 | 45 | 41 | 32 | 114 | 32 | 3 | — | BSPT1/4 | 19 | M12 | — | — |
| B-5 | 372 | 428 | — | 81 | 203 | 225 | 167 | 34 | 91 | — | 165 | 130 | 45 | 46 | — | 162 | 63 | 3 | — | BSPT1/2 | 32 | M20 | — | — |
| B-6 | 532 | 636 | 212 | 130 | 267 | 208 | 158 | 144 | 82 | 260 | 220 | 180 | 45 | 60 | — | — | 99 | 4 | 5 | BSPT1/2 | 26 | M16 | 18 | 64.4 |

## Type BS (Spring-Return)

### Type BS-0 to BS-5

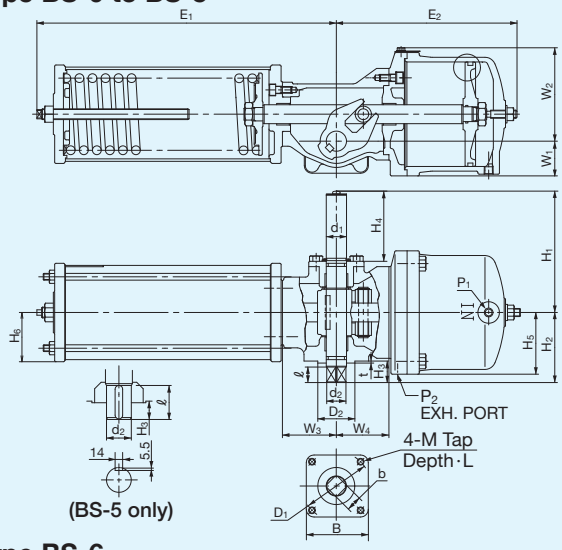


### Type BS-6

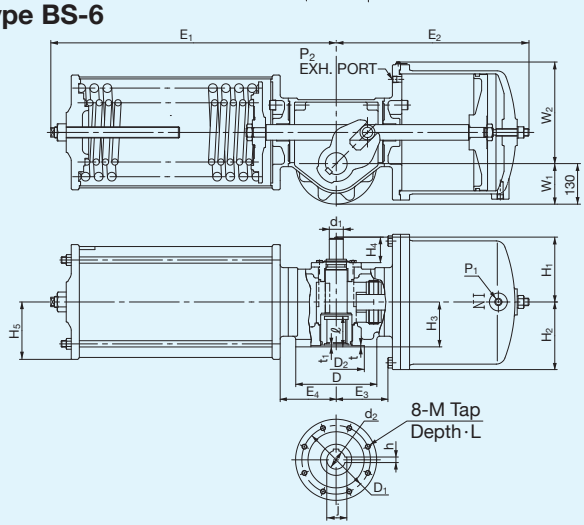


## Type BSW (Spring-Return with Manual Operation Device)

### Type BSW-0 to BSW-5

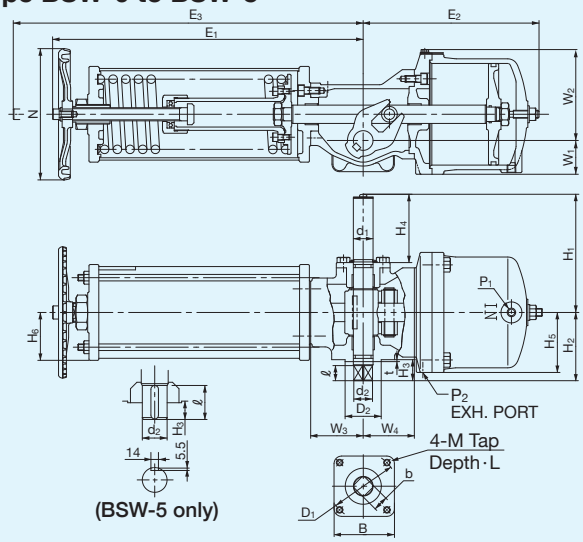


### Type BSW-6

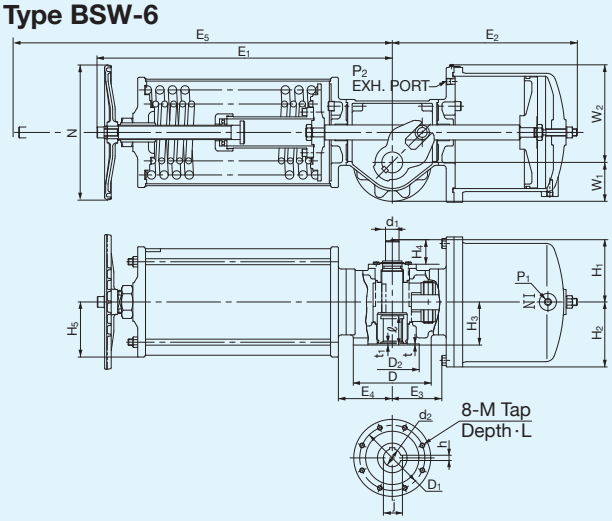


Note) B-5 / B-6 cannot be used lever handle or wrench tools fan manual operation.

## Type BS Actuator Dimensions

unit: mm

| Type | $E_1$ | $E_2$ | $E_3$ | $E_4$ | $W_1$ | $W_2$ | $W_3$ | $W_4$ | $H_1$ | $H_2$ | $H_3$ | $H_4$ | $H_5$ | $H_6$ | D | $D_1$ | $D_2$ | $d_1$ | $d_2$ | b | B | ℓ | t | $t_1$ | M | L | h | j | $P_1$ | $P_2$ |
|---|---|---|---|---|---|---|---|---|---|---|---|---|---|---|---|---|---|---|---|---|---|---|---|---|---|---|---|---|---|---|
| BS-0 | 163 | 127 | — | — | 40 | 62 | — | 38 | 75 | 53 | 18 | 40 | 41 | — | — | 50 | 35 | 12 | 15 | 12 | 50 | 12 | 2 | — | M6 | 9 | — | — | BSPT1/8 | BSPT1/8 |
| BS-1 | 239 | 166 | — | — | 30 | 83 | 47 | 38 | 140 | 60 | 18 | 94 | 52 | 46 | — | 50 | 35 | 16 | 15 | 12 | 50 | 12 | 2 | — | M6 | 9 | — | — | BSPT1/4 | BSPT1/8 |
| BS-2 | 335 | 215 | — | — | 38 | 106 | 62 | 56 | 153 | 77 | 23 | 99 | 68 | 54 | — | 70 | 55 | 22 | 21 | 17 | 70 | 17 | 2 | — | M8 | 12 | — | — | BSPT1/4 | BSPT1/8 |
| BS-3 | 451 | 286 | — | — | 52 | 140 | 80 | 78 | 180 | 104 | 32 | 104 | 92 | 73 | — | 102 | 70 | 30 | 28.5 | 23 | 95 | 23 | 3 | — | M10 | 15 | — | — | BSPT1/4 | BSPT1/4 |
| BS-4 | 575 | 361 | — | — | 81 | 188 | 100 | 91 | 230 | 138 | 43 | 127 | 130 | 99 | — | 125 | 85 | 45 | 41 | 32 | 114 | 32 | 3 | — | M12 | 19 | — | — | BSPT1/2 | BSPT1/4 |
| BS-5 | 745 | 461 | — | — | 117 | 256 | 128 | 114 | 225 | 167 | 34 | 91 | 182 | 139 | — | 165 | 130 | 45 | 46 | — | 162 | 63 | 3 | — | M20 | 32 | — | — | BSPT1/2 | BSPT1/4 |
| BS-6 | 931 | 638 | 169 | 180 | 130 | 326 | — | — | 208 | 217 | 144 | 82 | 184 | — | 260 | 220 | 180 | 45 | 60 | — | — | 99 | 4 | 5 | M16 | 26 | 18 | 64.4 | BSPT1/2 | BSPT1/2 |

* $E_1$ & $E_2$ dimention can be different from the list depending on actual adjusting.

## Type BSW Actuator Dimensions

unit: mm

| Type | $E_1$ | $E_2$ | $E_3$ | $E_4$ | $E_5$ | $W_1$ | $W_2$ | $W_3$ | $W_4$ | $H_1$ | $H_2$ | $H_3$ | $H_4$ | $H_5$ | $H_6$ | D | $D_1$ | $D_2$ | $d_1$ | $d_2$ | b | B | ℓ | t | $t_1$ | M | L | h | j | N | $P_1$ | $P_2$ |
|---|---|---|---|---|---|---|---|---|---|---|---|---|---|---|---|---|---|---|---|---|---|---|---|---|---|---|---|---|---|---|---|---|
| BSW-0 | 185 | 127 | 218 | — | — | 40 | 62 | — | 38 | 75 | 53 | 18 | 40 | 41 | — | — | 50 | 35 | 12 | 15 | 12 | 50 | 12 | 2 | — | M6 | 9 | — | — | 90 | BSPT1/8 | BSPT1/8 |
| BSW-1 | 259 | 166 | 315 | — | — | 30 | 83 | 47 | 38 | 140 | 60 | 18 | 94 | 52 | 46 | — | 50 | 35 | 16 | 15 | 12 | 50 | 12 | 2 | — | M6 | 9 | — | — | 100 | BSPT1/4 | BSPT1/8 |
| BSW-2 | 362 | 215 | 438 | — | — | 38 | 106 | 62 | 56 | 153 | 77 | 23 | 99 | 68 | 54 | — | 70 | 55 | 22 | 21 | 17 | 70 | 17 | 2 | — | M8 | 12 | — | — | 140 | BSPT1/4 | BSPT1/8 |
| BSW-3 | 482 | 286 | 582 | — | — | 52 | 140 | 80 | 78 | 180 | 104 | 32 | 104 | 92 | 73 | — | 102 | 70 | 30 | 28.5 | 23 | 95 | 23 | 3 | — | M10 | 15 | — | — | 200 | BSPT1/4 | BSPT1/4 |
| BSW-4 | 609 | 361 | 734 | — | — | 81 | 188 | 100 | 91 | 230 | 138 | 43 | 127 | 130 | 99 | — | 125 | 85 | 45 | 41 | 32 | 114 | 32 | 3 | — | M12 | 19 | — | — | 250 | BSPT1/2 | BSPT1/4 |
| BSW-5 | 795 | 461 | 956 | — | — | 117 | 256 | 128 | 114 | 225 | 167 | 34 | 91 | 182 | 139 | — | 165 | 130 | 45 | 46 | — | 162 | 63 | 3 | — | M20 | 32 | — | — | 300 | BSPT1/2 | BSPT1/4 |
| BSW-6 | 1006 | 638 | 169 | 180 | 1250 | 130 | 326 | — | — | 208 | 217 | 144 | 82 | 184 | — | 260 | 220 | 180 | 45 | 60 | — | — | 99 | 4 | 5 | M16 | 26 | 18 | 64.4 | 450 | BSPT1/2 | BSPT1/2 |

* $E_1$ & $E_2$ dimention can be different from the list depending on actual adjusting.

# Cylinder Volume and Air Supply Requirements

On installation of control system for actuators, air requirements of actuators should be carefully studied to ensure that a sufficient pressure is provided. Actuators should be activated by clean air which is made free from moisture by air driers. For frequent operation, occasional lubrication is recommended for higher efficiency and longer service life.

**Cylinder volume for Type B actuators**

| Type \ Cylinder | $V_1$ | $V_2$ |
|---|---|---|
| B-0 | 0.05 | 0.07 |
| B-1 | 0.17 | 0.17 |
| B-2 | 0.43 | 0.43 |
| B-3 | 1.04 | 1.09 |
| B-4 | 2.69 | 2.75 |
| B-5 | 6.53 | 6.80 |
| B-6 | 15.90 | 14.20 |

(unit: ℓ)

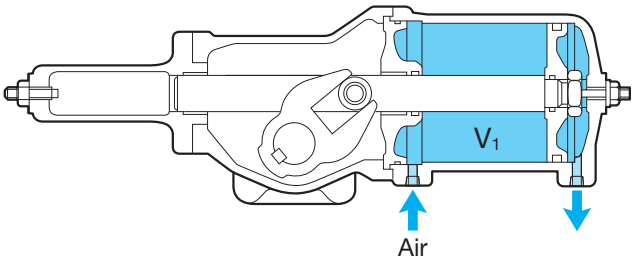


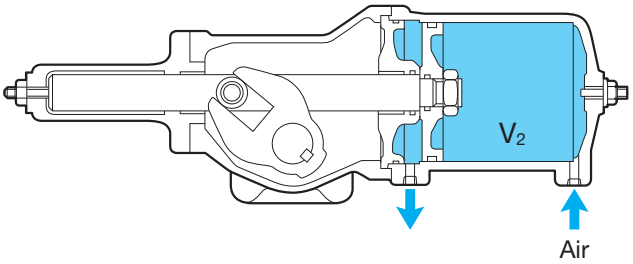


**Cylinder volume for Type BS/BSW actuators**

| Type \ Cylinder | V |
|---|---|
| BS-0/BSW-0 | 0.17 |
| BS-1/BSW-1 | 0.33 |
| BS-2/BSW-2 | 0.82 |
| BS-3/BSW-3 | 2.23 |
| BS-4/BSW-4 | 5.39 |
| BS-5/BSW-5 | 13.70 |
| BS-6/BSW-6 | 30.20 |

(unit: ℓ)

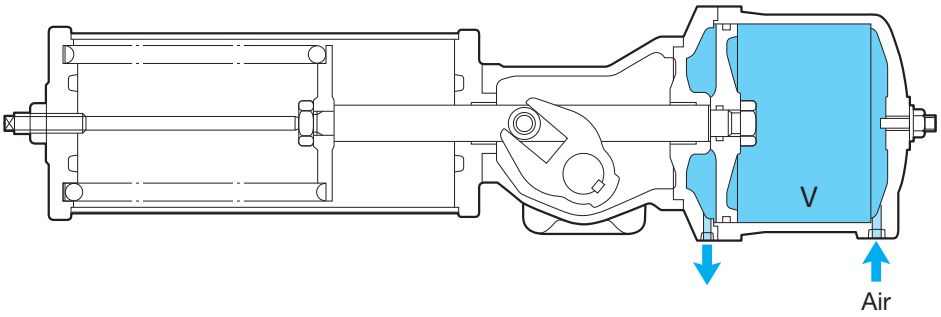

## Air Supply Requirement (Flow Rate)

Actuators should be supplied with the air, sufficient to operate the valve through a full stroke from the open to closed position and vice versa in "t" seconds, as converted into flow rate per minute. The required air volume "Q" is calculated as follows.

$$Q = V\left(\frac{P+0.1013}{0.1013}\right) \times \frac{60}{t} \text{ (N}\ell\text{/min.)}$$

Q = Air supply requirement per minute (Nℓ/min.)
V = Cylinder volume (liters)
$V_1$ or $V_2$, whichever larger, for Type B actuators
P = Supply pressure (MPaG)
t = Time required per stroke (seconds)

All accessories to be mounted on the actuator such as solenoid valves, air filters, regulators, and air supply pipes, should have sufficient capacity to accommodate air flow rate (Q) calculated here.

## Air Consumption

Air consumption means the volume of air discharged into the atmosphere from actuator operation "n" cycles (double strokes) per hour as converted into volumes per minute. The value is calculated as follows.

Type B actuator:

$$Q = (V_1+V_2)\left(\frac{P+0.1013}{0.1013}\right) n \times \frac{1}{60} \text{ (N}\ell\text{/min.)}$$

Type BS or BSW actuator:

$$Q = V\left(\frac{P+0.1013}{0.1013}\right) n \times \frac{1}{60} \text{ (N}\ell\text{/min.)}$$

For selecting compressors and air reservoirs for these actuators, determine the capacities based on the air consumption values obtained from the above calculations, adding an extra 30% as allowance for possible loss of air caused by solenoid valves, accessories, piping, etc.

## ⚠CAUTION

- For manual operation, ensure in advance to (a) shut off the supply of air and (b) discharge of the air left in the housing to the atmosphere.
  For double-action actuators, the pressure equalizing valve should be opened in advance.
- After manual operation, the lever handle should be removed. Operating actuators with handles attached is extremely dangerous.
- Long bolts securing the spring case should not be loosened or unscrewed, unless required for maintenance, particularly in case of manual operation of spring-return actuators. A compressed spring may suddenly break out, causing an extreme danger.
- KITZ Operation Manual is available for safe and efficient operation of KITZ B Series actuators, on request.

## Manual Operation

For double-action type actuators, manual lever handles for Type B-1 through B-4, and manual operation devices for Type B-5 and B-6 are readily available.
For spring-return type actuators, specify Type BSW on your order for provision of manual operation.

# Air Piping for Actuators

When assembling air supply pipes (either copper pipes or covered copper pipes) to actuators:

1. Select pipes of suitable diameter and wall thickness.
2. Seal all pipe joints securely to avoid leakage since accessories are mounted along the pipes between air supply source and actuator. Use PTFE tapes for sealing, making sure that loose tape ends do not extend into the pipe: they may block ports and air supply may be adversely effected.

## Type B Actuators (Double-Action)

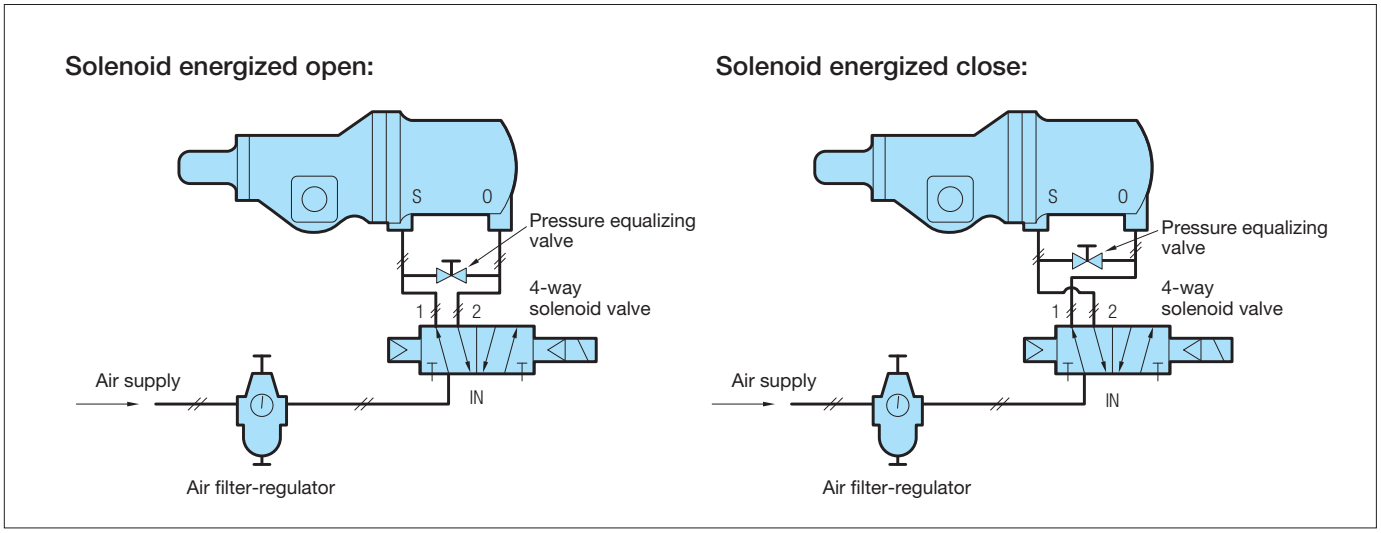


## Type BS/BSW Actuators (Spring-return)

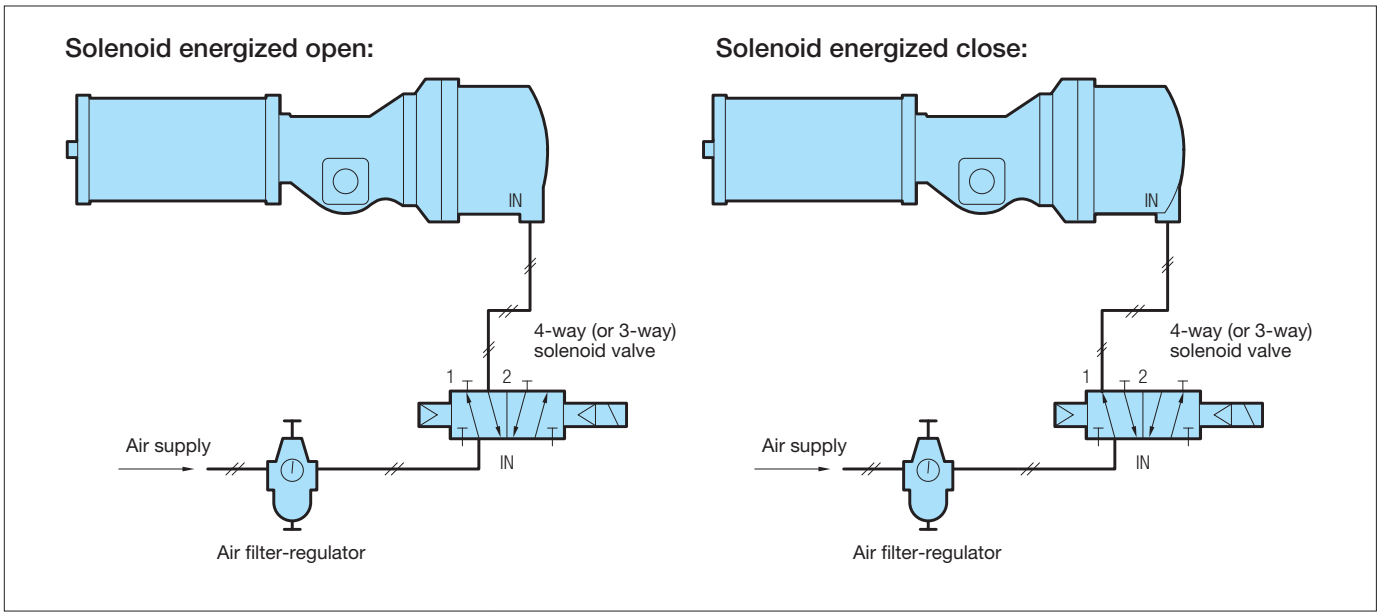


Circuit diagrams of solenoid valves indicate that they are NOT energized.

# Construction Details of Type B Actuators

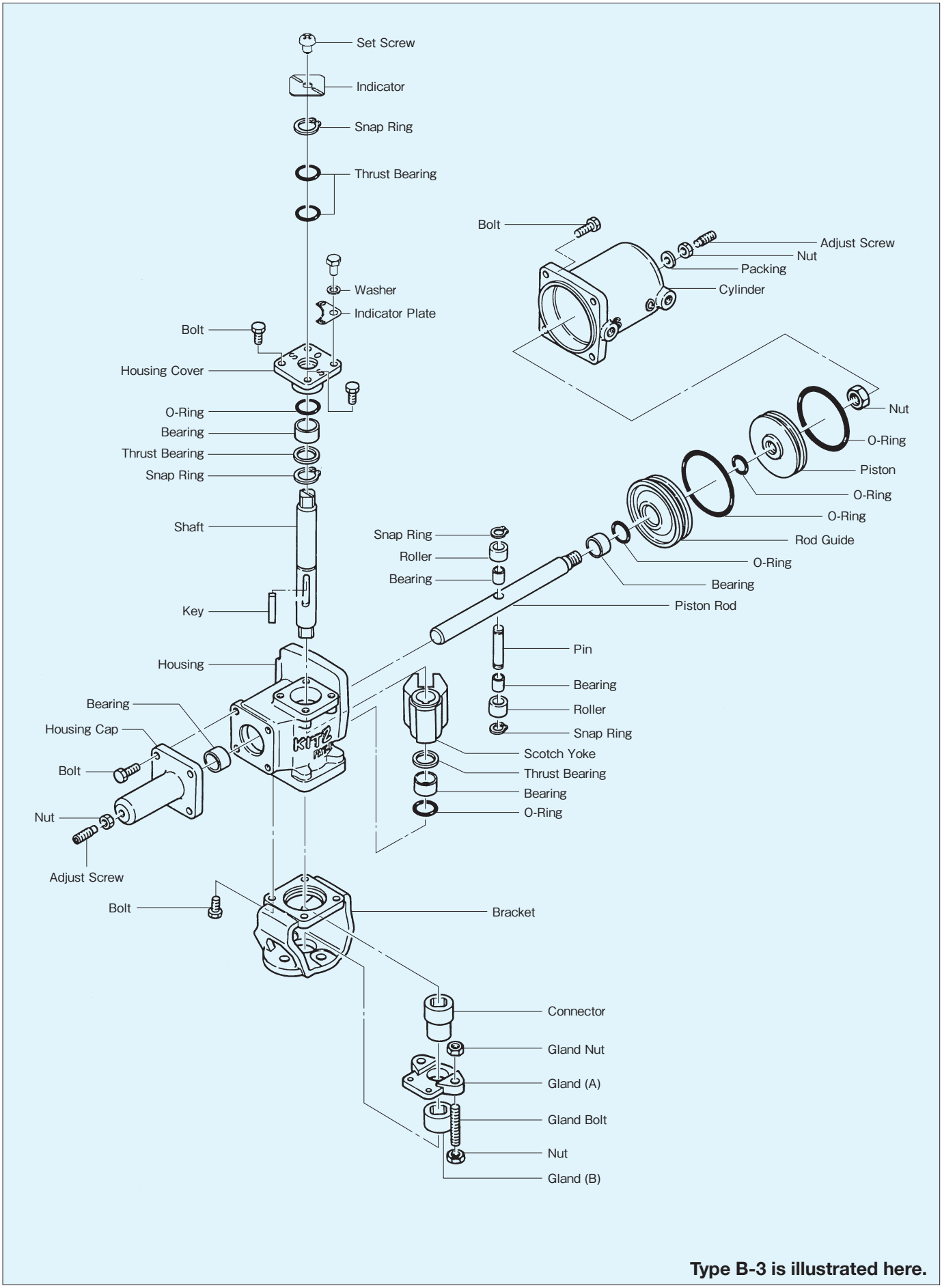


**Type B-3 is illustrated here.**

# Construction Details of Type BS Actuators

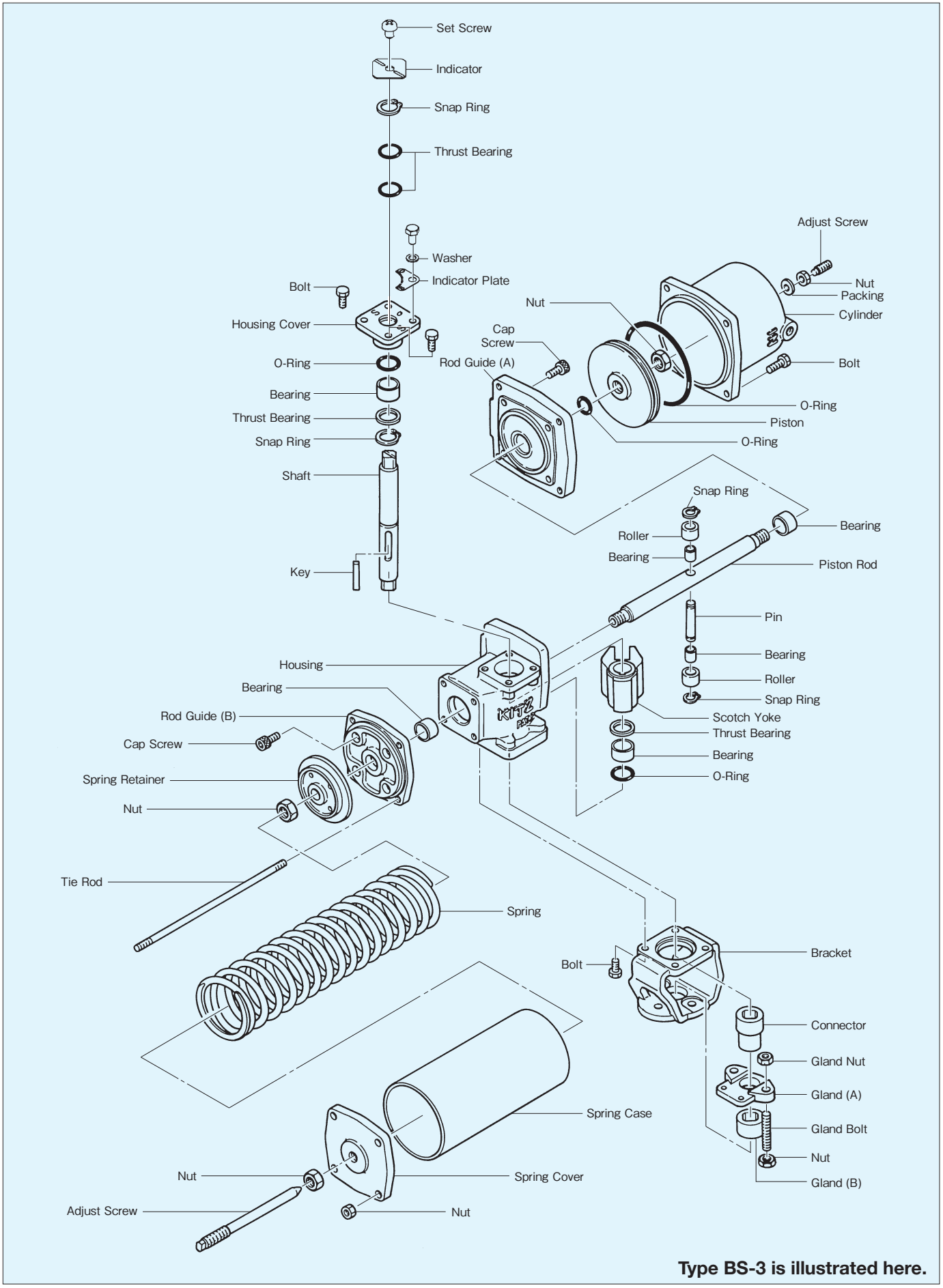


**Type BS-3 is illustrated here.**

# Construction Details of Type BSW Actuators

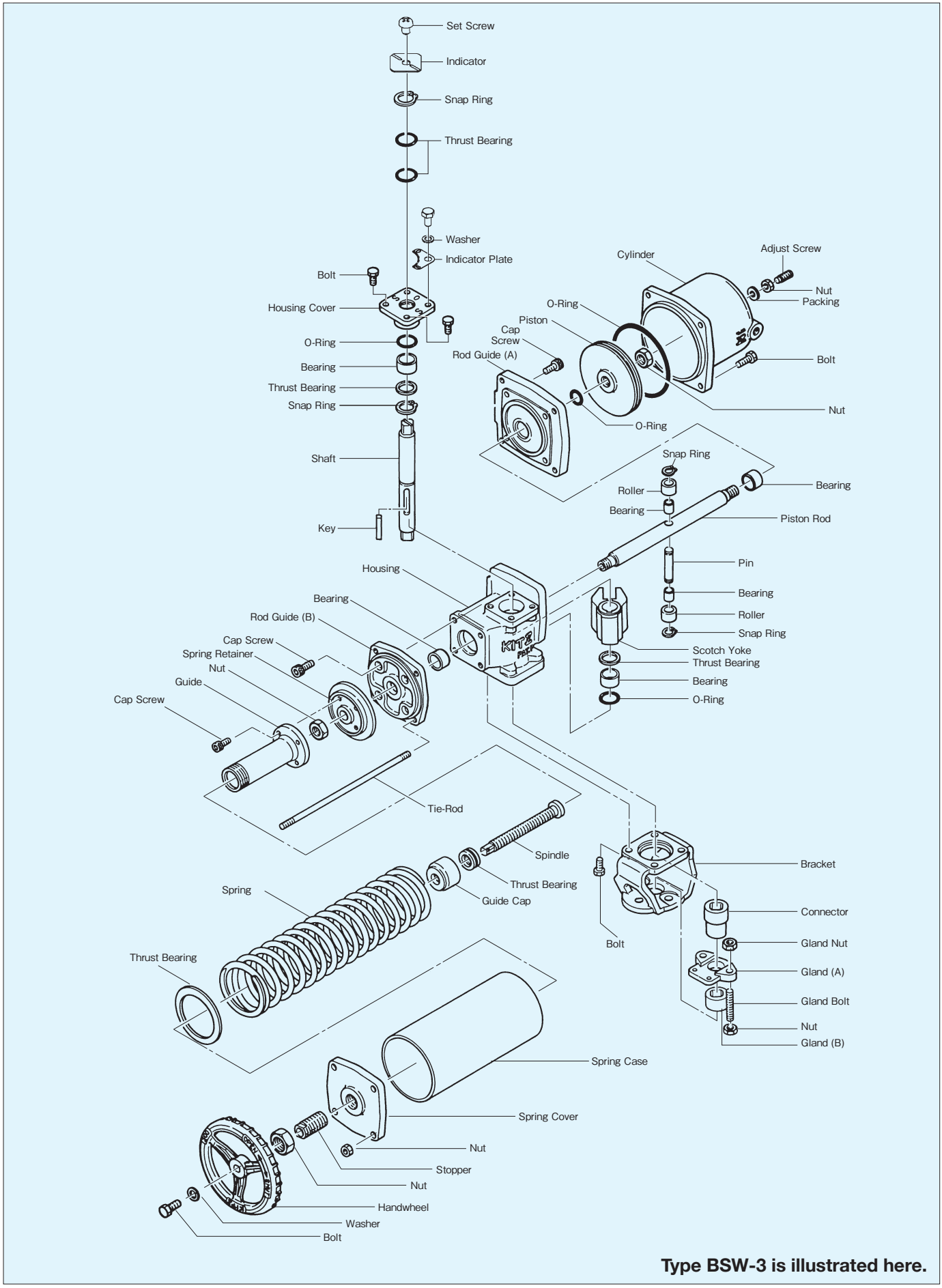


**Type BSW-3 is illustrated here.**

# Three-Position Control Valves (3B Series)

## Features

(1) Adjustment of opening position is mechanically controlled, which enables fine adjustment and makes adjustment work and maintenance easier.
*Initial opening position adjustment range
The intermediate position of the 3B series can be adjusted at any given degree within 0° to 30°.
Double-action type ... Special wrench supplied with the product Spring-return type ... Wrenches available on the market

(2) The open/close response is so quick that it can be used for emergency shutoff.

(3) Reliable control is provided which prevents overshoot at the opening.

(4) Excellent shock resistance and cost reduction is archived by eliminating the need for positioners.

(5) The design reduces air consumption and enables the actuator to be compact.

(6) A mechanism is provided to prevent a shock action (jumping) at the start of the opening operation.

(7) The open/close action pattern (opening position/time) is selectable.

(8) The unit complies easily with explosion proof specifications.

## Specifications

### Actuator

| Operation Type / Type / Specifications | | Double-action | | | | Spring return/Spring return type with manual operation device (lower row) | | | |
|---|---|---|---|---|---|---|---|---|---|
| | | 3B-1 | 3B-2 | 3B-3 | 3B-4 | 3BS-1<br>3BSW-1 | 3BS-2<br>3BSW-2 | 3BS-3<br>3BSW-3 | 3BS-4<br>3BSW-4 |
| **Operating media** | | Compressed instrument air | | | | | | | |
| **Standard operating pressure** | | 0.4 MPa | | | | | | | |
| **Operating pressure range** | | 0.4–0.7 MPa or less | | | | | | | |
| **Cylinder test pressure** | | 0.97 MPa | | | | | | | |
| **Operation torque (ending)** | N·m | 36 | 94 | 235 | 598 | 27 | 71 | 176 | 449 |
| **Cylinder volume** | V1(1) | 0.17 | 0.43 | 1.04 | 2.75 | 0.39 | 0.80 | 2.29 | 5.73 |
| | V2(1) | 0.17 | 0.43 | 1.09 | 2.69 | 0.18 | 0.48 | 1.39 | 3.93 |
| | V3(1) | 0.19 | 0.52 | 1.30 | 2.76 | — | — | — | — |
| | V4(1) | 0.33 | 0.82 | 2.23 | 5.39 | — | — | — | — |
| **Air supply port** | | BSPT1/4 | | | | | | | BSPT1/2 |
| **Drive shaft rotation** | | 90° (± 5° at each end) | | | | | | | |
| **Intermediate opening adjustment range** | | 0–30° | | | | | | | |
| **Ambient temperature** | | –20°C to + 60°C (supplied air should not frozen) | | | | | | | |
| **Standard coating** | | Acrylic modified alkyd resin heat resistant paint/Paint color: silver | | | | | | | |

Double-action

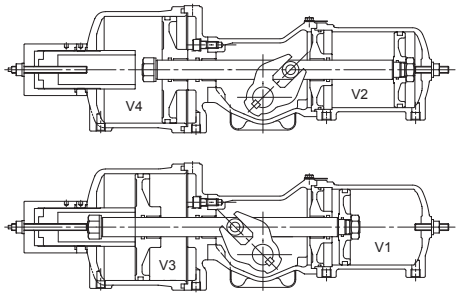


Spring-return

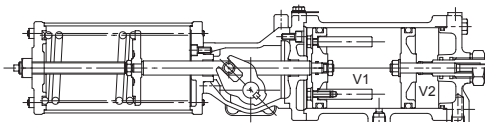


## Accessories

| Standard accessories | Specifications |
|---|---|
| **1 Filter regulator**<br><br>**1 piece** | Standard specifications: SMC product AW series, CKD product 7019 series<br>• Manufacturer standard type (relieving type) |

| Model \ Spec. | Air inlet (BSPT) | Flow rate* Nℓ/min (approx.) | Pressure setting range (MPa) | Ambient temperature (℃) | Actuator size common with 3B/3BS/3BSW |
|---|---|---|---|---|---|
| B7019-2C-GB | 1/4 | 600 | 0.04–0.83 | 5–65 | 3B-1 |
| AW30-02BG-R | | 1,500 | 0.05–85 | –5–60 | 3B-2–3B-4 |

*Flow rate: values at inlet pressure 0.69 MPa and output pressure of 0.39 MPa.
・Bowl material: Polycarbonate
・Nominal filtration rating: 5 μm

| Standard accessories | Specifications |
|---|---|
| **2 Solenoid valve**<br><br>**2 pieces** | Standard specifications: Konan Electric CO., Ltd. product 454 series<br>• Pilot operated four-way solenoid valve: Single solenoid |

| Model \ Spec. | Constr-uction | Air inlet (BSPT) | Cv Value | Pressure setting range (MPa) | Ambient temperature (℃) | Power source |
|---|---|---|---|---|---|---|
| 454S202C-E01-H1 | Explosion proof | ¼ | 1.19 | 0.15–0.8 | –5–+60 | AC100/110V |
| 454S202C-E01-H3 | | | | | | AC200/220V |
| 454S202C-E01-H5 | | | | | | DC24V |

*A manifold solenoid valve assembled with two single solenoids
Suffix "-00-G30887" is added to the above model number.

| Standard accessories | Specifications |
|---|---|
| **3 Speed controller**<br><br>**1 piece** | Standard specifications: SMC product AS series |

| Model \ Spec. | Connec-tion (BSPT) | Max flow rate*: Nl / min controlled/ free flow | Operating pressure range (MPa) | Ambient temp. (°C) | Actuator size common with 3B/3BS/3BSW |
|---|---|---|---|---|---|
| AS2000-02 | ¼ | 250/340 | 0.05–1.0 | –5–60 | 3B-1 |
| AS3000-02-X581 | | 810/810 | | | 3B-2–3B-4 |

Note: The installation position of one speed controller is between the full open position and the intermediate position on the closing side.
*The max flow rate is the value under the conditions that the inlet pressure is 0.5 MPa, the outlet is released to atmosphere, the temperature is 20°C, and the orifice of the speed controller is fully opened.
・Low temperature application (-30 to 60°C) and high temperature application (-10 to 80°C) are not indicated in the model number. Therefore, specify in the specification sheet.

| Standard accessories | Specifications |
|---|---|
| **4 Silencer**<br><br>**3 pieces** | Standard specifications: Koganei product KM series<br>• Compact type |

| Model \ Spec. | Connec-tion (BSPT) | Effective area ($mm^2$) | Recom-mended flow *Nl/min | Noise reduction (dB) | Ambient temp. (°C) | Actuator size common with 3B/3BS/3BSW |
|---|---|---|---|---|---|---|
| KM-22 | ¼ | 21 | 1,000 | 18 or more | 5–60 | 3B-1–3B-4 |

| Standard accessories | Specifications |
|---|---|
| **5 Mounting screws, brackets, air pipes 1 Set** | ・Mounting screw: SUS304<br>・Bracket: FCD450<br>・Connector: SCS13A<br>・Air pipe/fitting: steel pipes/brass joints (stainless steel is optionally available) |

*Other accessories (such as a pressure equalizing valve) are optionally available.

## Operational Mechanism <Double Action>

### ■ The Fully Closed position

**(1) The fully closed position**

When both the solenoid valves 1 and 2 are de-energized, the air pressure passes through solenoid valve 1 and enters the cylinder chamber V2. The air pressure in the cylinder chamber V2 moves the small piston on the right to the right end, and the actuator output shaft rotates clockwise when viewing from above. At this point, the disc reaches the fully closed position.

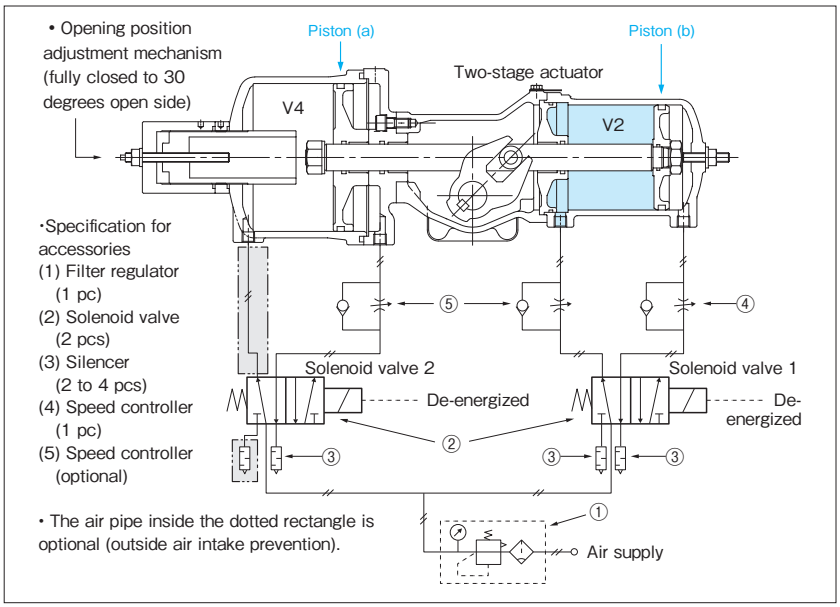


### ■ The Intermediate Position

**(2) Open at the first stage** (the intermediate position: within 30 degrees)

When the solenoid valve 2 is energized, the air pressure passes through solenoid valve 2 and enters the cylinder chamber V3. The air pressure in the cylinder chamber V3 moves the large piston on the left up to the stopper of the first stage, and the actuator output shaft rotates counter-clockwise (within the range of 0 to 30 degrees) when viewing from above.

At this point, the disc moves to the intermediate position and stops there.

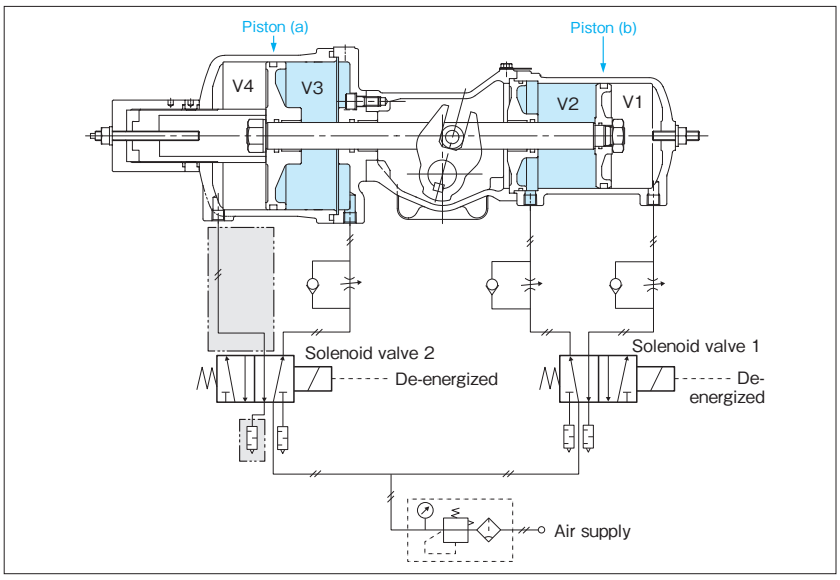


### ■ The Fully Open Position

**(3) Open at the second stage opening** (fully open)

When solenoid valve 1 is energized, the air pressure passes through solenoid valve 1 and enters the cylinder chamber V1, and at the same time, air pressure in the cylinder chamber V2 is exhausted from the exhaust port of solenoid valve 1.

The air pressure in the cylinder chamber V1 moves the small piston on the right to the left end, and the actuator output shaft rotates counter-clockwise when viewing from above. At this point, the disc reaches the fully open position.

**(4) Closed at the first stage** (the intermediate position: within 30 degrees)

While the actuator action is same as (2), it is able to adjust operating speed by the speed controller (4).

**(5) Closed at the second stage** (fully closed)

The actuator action is the same as (1).

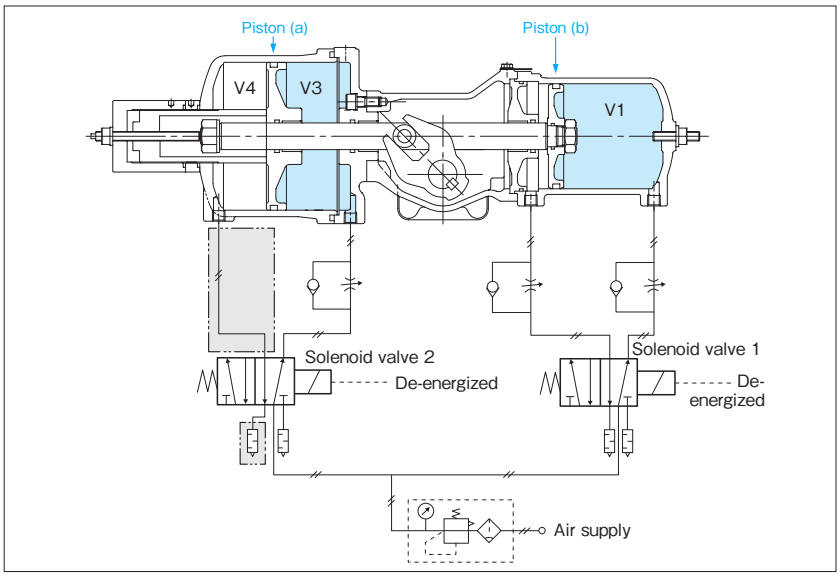

## Operational Mechanism <Spring Return>

### ●Spring Return Actuator <Type 3BS/3BSW>

(The figures show type 3BS actuator)

### ■ The Fully Closed Position

**(1) The fully closed position**

When both solenoid valves 1 and 2 are de-energized, air pressure in the cylinder chambers V1 and V2 is exhausted from the exhaust ports of solenoid valves 1 and 2, and then the disc moves to the fully closed position.

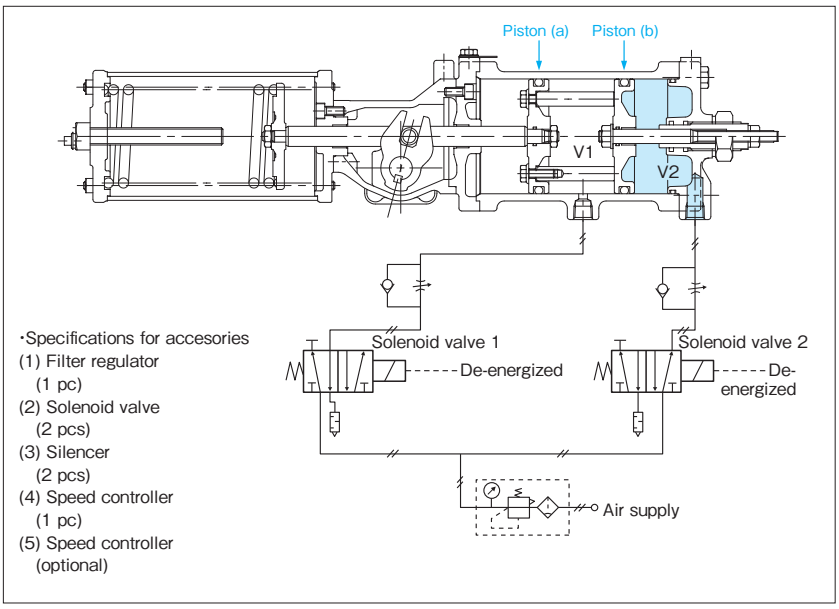


### ■ The Intermediate Position

**(2) Open at the first stage** (The intermediate position: within 30 degrees)

When solenoid valve 1 is de-energized and solenoid valve 2 is energized, the air pressure enters the cylinder chamber V2, and the piston (b) moves to the stopper at the first stage. The actuator output shaft rotates counter-clockwise (within the range from 0 and 30 degrees) when viewing from above, and the disc moves to the intermediate position and stops there.

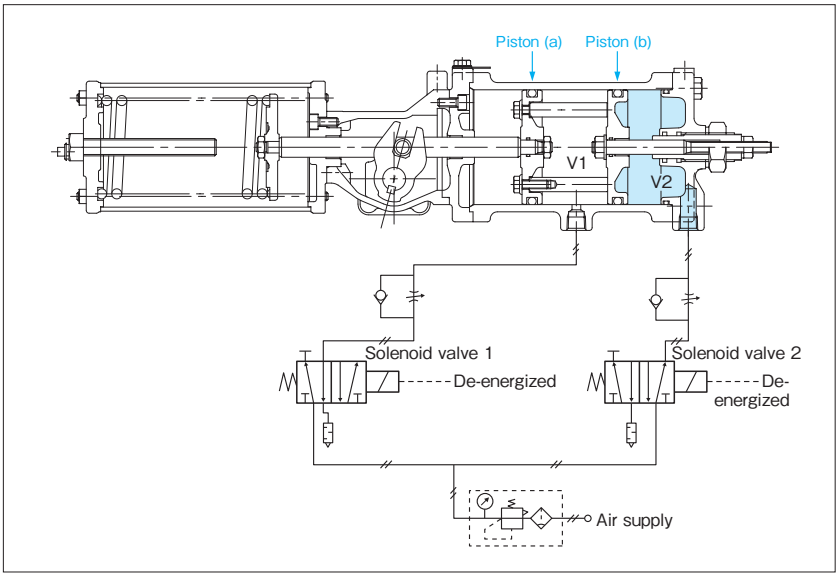


### ■ The Fully Open Position

**(3) Open at the second stage** (fully open)

When solenoid valve 1 is energized, the air pressure passes through solenoid valve 1 and enters the cylinder chamber V1, and the piston (a) moves to the left. The actuator output shaft rotates counter-clockwise when viewing from above, and the disc reaches the fully open position.

**(4) Closed at the first stage** (the intermediate position: within 30 degrees)

When the actuator action is the same as (2), it is able to adjust operating speed by the speed controller (4).

**(5) Closed at the second stage** (fully closed)

The actuator action is the same as (1).

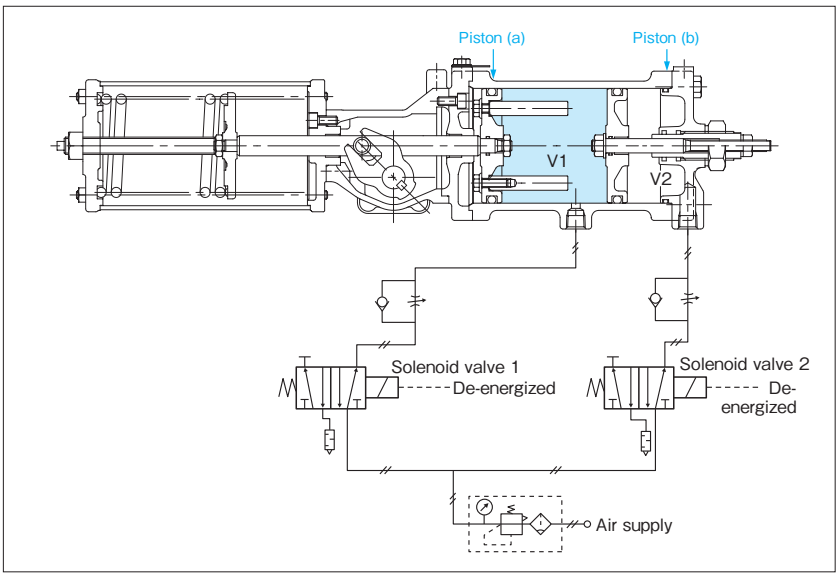

## Operation Type (Time Chart)

By switching two solenoid valves, the following types of actuator actions are possible.

**1) Open/closed at two stages:** Fully closed ①→ Intermediate ②→ Fully open ③→ Intermediate ④→ Fully closed ⑤

**[Action pattern]**

| | SOV1 | SOV2 | Valve pos. | Time |
|---|---|---|---|---|
| ① | De-energized | De-energized | Fully closed | — |
| ② | De-energized | Energized | Intermediate | t1–t2 |
| ③ | Energized | Energized | Fully open | t3–t4 |
| ④ | De-energized | Energized | Intermediate | t5–t6 |
| ⑤ | De-energized | De-energized | Fully closed | t7 |

Note: SOV is an abbreviation for solenoid valve.

**[Operating time of the actuator]**

- The time "t5" can be adjusted by the speed controller.
- The times "t2", "t4" and "t6" are specified by the user.

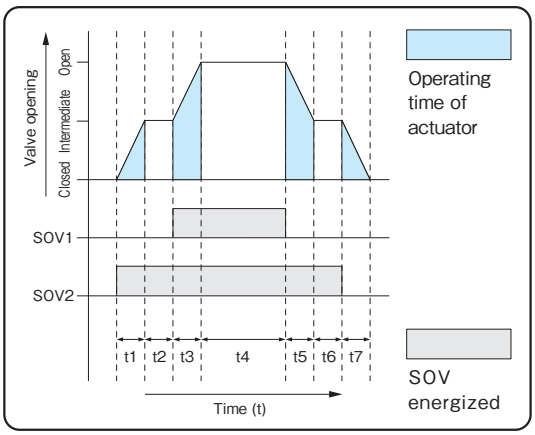


**2) Open at one stage/closed at two stages:** Fully closed ①→ Fully open ②→ Intermediate ③→ Fully closed ④

**[Action pattern]**

| | SOV1 | SOV2 | Valve pos. | Time |
|---|---|---|---|---|
| ① | De-energized | De-energized | Fully closed | — |
| ② | Energized | Energized | Fully open | t1–t2 |
| ③ | De-energized | Energized | Intermediate | t3–t4 |
| ④ | De-energized | De-energized | Fully closed | t5 |

Note: SOV is an abbreviation for solenoid valve.

**[Operating time of the actuator]**

- The time "t3" can be adjusted by the speed controller.
- The times "t2" and "t4" are specified by the user.

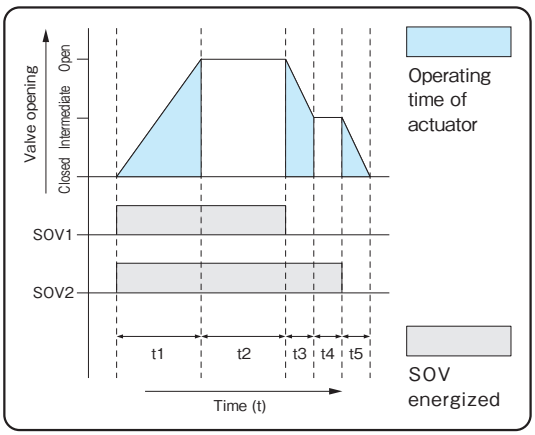


**3) Open at two stages/closed at one stage:** Fully closed ①→ Intermediate ②→ Fully open ③→ Fully closed ④

**[Action pattern]**

| | SOV1 | SOV2 | Valve pos. | Time |
|---|---|---|---|---|
| ① | De-energized | De-energized | Fully closed | — |
| ② | De-energized | Energized | Intermediate | t1–t2 |
| ③ | Energized | Energized | Fully open | t3–t4 |
| ④ | De-energized | De-energized | Fully closed | t5 |

Note: SOV is an abbreviation for solenoid valve.

**[Operating time of the actuator]**

- The time "t5" can be adjusted by the speed controller.
- The times "t2" and "t4" are specified by the user.

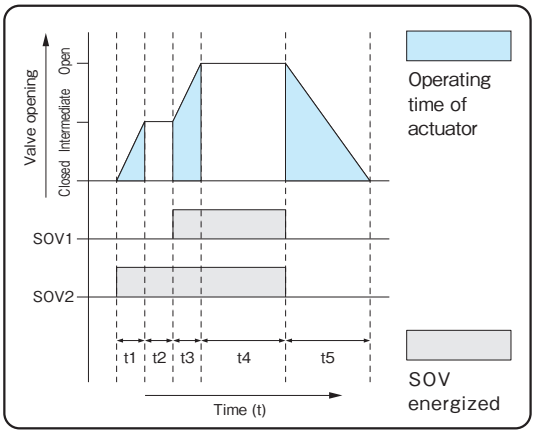


**4) Open/closed at one stage:** Fully closed ①→ Fully open ②→ Fully closed ③

**[Action pattern]**

| | SOV1 | SOV2 | Valve pos. | Time |
|---|---|---|---|---|
| ① | De-energized | De-energized | Fully closed | — |
| ② | Energized | De-energized | Fully open | t1–t2 |
| ③ | De-energized | De-energized | Fully closed | t3 |

Note: SOV is an abbreviation for solenoid valve.

**[Operating time of the actuator]**

- The time "t3" can be adjusted by the speed controller.
- The times "t2" is specified by the user.

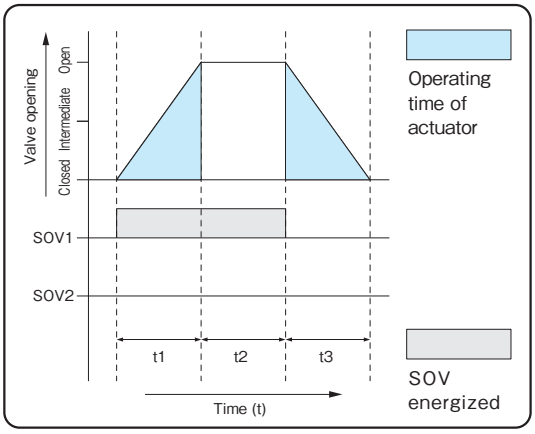

# Actuator Sizing (For Ball valves)

The operating torque of a valve varies according to fluid conditions such as pressure, temperature, velocity, viscosity and density. The following actuator sizes are recommended for typical light or heavy load service with the fluid conditions specified below. Selection of Type B listed here can be also applied to selection of Type BS and Type BSW.

IMPORTANT
Selection of actuators is very critical when:
- ■Fluid pressure is higher than that listed below.
- ■Fluid velocity is extremely high.
- ■Operational interval exceeds three months.
- ■Operating pressure is lower than 0.4 MPa (60 psi)

## For TDZ Series (Full Bore Design)

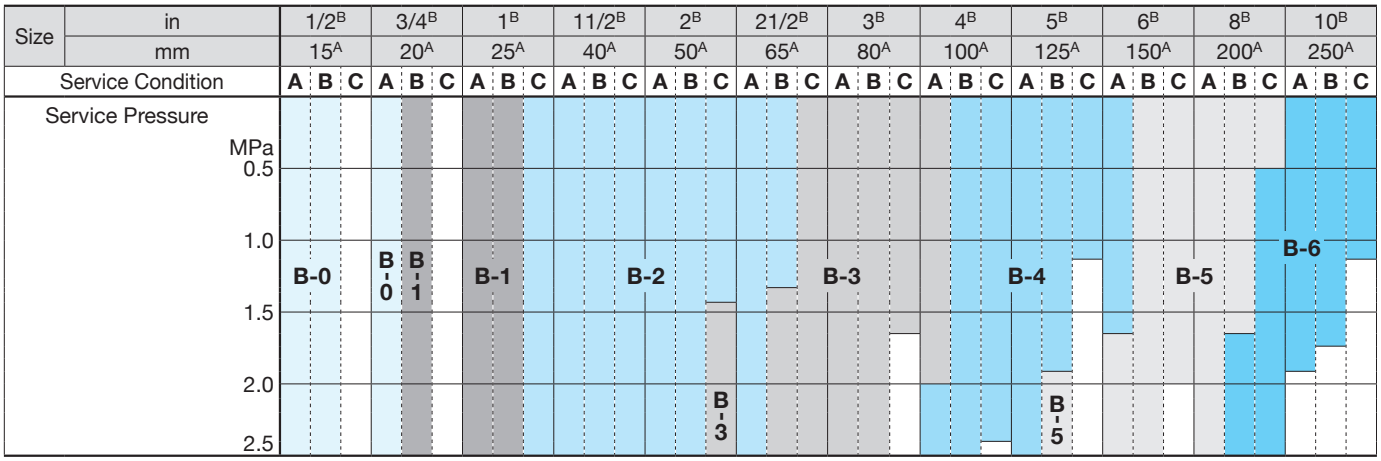


*Consult KITZ distributors for availability of appropriate actuators.

## For TB Series

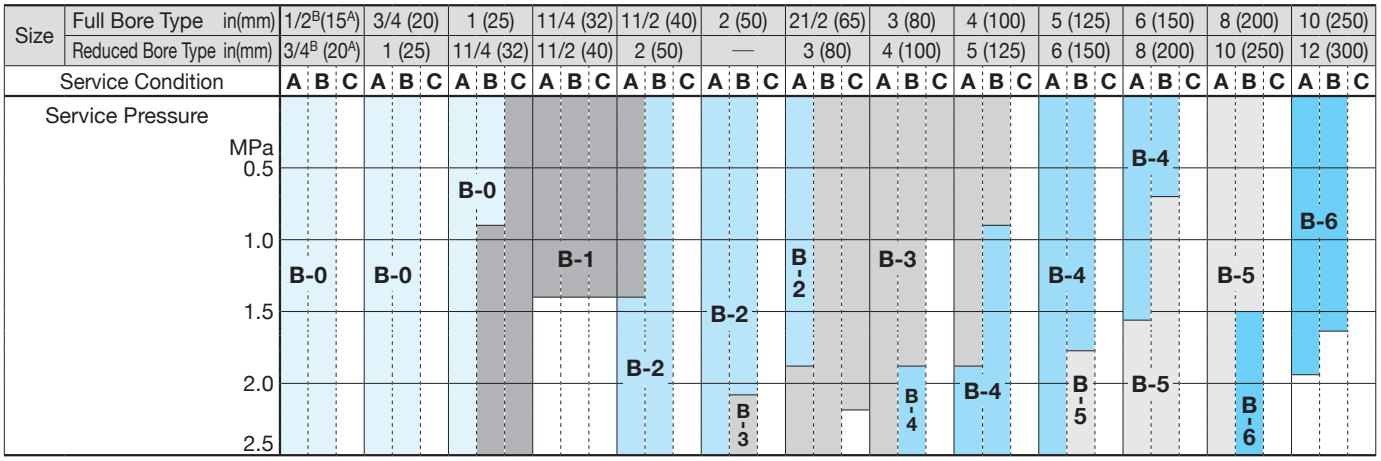


*Consult KITZ distributors for availability of appropriate actuators.

### Fluid Condition

| Fluids \ Service Condition | Light Load Service | Heavy Load Service |
|---|---|---|
| Water | Clean: A | Including rust. scale and ash: B |
| Air, steam and gases | up to 0.7 MPa: A | Over 0.7 MPa: B |
| Highly viscous fluid | 10000cP or less: A | 50000cP or less: B |
| Kerosene, naphtha, alcohol, and other solvents | — | 50000cP or less: B |
| Oil-free service | — | 50000cP or less: B |
| Slurry and other liquids containing foreign objects | — | up to 1.0 MPa: C* |
| Service temperature: Fluids temperature | See valve seat rating of “Ball Valves Catalog” (E-201) | |

Contact us for fluids other than the above.

*Contact us for extremely heavy load service (powder, slurry, dehydrated cake, etc.) or fluids easy to solidify or polymerize.

# Optional Accessories

The following optional accessories are recommended for KITZ B Series actuators.
For supply of other accessories, contact your local KITZ distributors.

| Product code | Purpose | Specifications |
|---|---|---|
| **Limit Switch**<br>LS Weather-proof<br>LS-F Explosion-proof | For initiating electric signals to check open or close position of the valve:<br>A separate limit switch is recommended for each of open and close indications. | LS AC: 10 A/125 V 10 A/250 V 10 A/480 V<br>DC: 0.8 A/115 V 0.4 A/230 V<br>LS-F AC: 5 A/125 V 5 A/250 V<br>DC: 0.8 A/125 V 0.4 A/250 V<br>Contact circuit: 2-Circuit double break |
| **Solenoid Valve**<br>SOV Weather-proof<br>SOV-F Explosion-proof | Flow switching over air flow by electric signal; 4-way solenoid valves for double-action actuators, 4-way solenoid valves for spring-return actuators, with one OUT port plugged, or 3-way solenoid valves used. | Connected pipe: BSPT1/4<br>Working pressure: 0~0.97 MPa<br>Orifice diam: 6 mm<br>Electric current: 100 V/50 Hz 100 V/60 Hz<br>110 V/60 Hz 200 V/50 Hz<br>200 V/60 Hz 220 V/60 Hz<br>Supply source connection<br>Weather-proof: DIN terminals or terminal boxes<br>Explosion-proof: Electric wire pipe threading |
| **Air Filter-Regulator**<br>F + R<br>(With pressure gauge) | For removing moisture, water and other foreign objects from operating air and for regulating air pressure at a desire level. | Connected pipe: BSPT1/4, BSPT1/2<br>Working pressure: Max. inlet pressure; 0.97 MPa<br>Setting pressure range: Max. outlet pressure; 0.04~0.83 MPa |
| **Speed Controller**<br>SP | For reducing actuator operating speeds. | Connected pipe: BSPT1/8, BSPT1/4, BSPT1/2<br>Operation pressure: 0.97 MPa max. |
| **Quick Exhaust Valve**<br>QE | For increasing actuator operation speed. This device can increase operation speed only when the actuator is operated by the spring. Positioners cannot be used together with a quick exhaust valves. | Connected pipe: BSPT1/4, BSPT1/2<br>Working pressure: 0.97 MPa max. |
| **Valve Positioner**<br>P<br>(Complete with pressure gauge) | For controlling the flow rate. A positioner can be mounted on either double-action or spring-return actuators. Operation mode, air-to-open or air-to-close, can be changed simply by reversing cam direction. | Connected pipe: BSPT1/4<br>(pressure gauge: BSPT1/8)<br>Supply pressure: 0.3~0.7 MPa<br>Signal pressure: 0.02~0.1 MPa or specified<br>Signal Current: E/P: (input signal)<br>4~20 mA<br>Air consumption: 20 Nℓ/min. max.<br>(at supply pressure 0.5 MPa) |
| **Silencer**<br>K | For reducing the air exhaust noise of solenoid valves. The device is installed at the exhaust port of a solenoid valve. | Connected pipe: BSPT1/8, BSPT1/4, BSPT1/2<br>Working pressure: 0.9 MPa max. |
| **Air Filter**<br>F | For removing moisture, water and other foreign objects from operating air. | Connected pipe: BSPT1/4, BSPT1/2<br>Working pressure: 0.97 MPa max. |
| **Pressure Equalizing Valve**<br>C | For equalizing the internal air pressure to the atmospheric level for manual operation of actuators. | Connected pipe: BSPT1/4<br>Working pressure: 1.37 MPa max. |

Above specifications are KITZ standards. Different specifications are optionally available.

# Features of KITZ F Series Pneumatic Actuators

## Type FA (Double-Action)

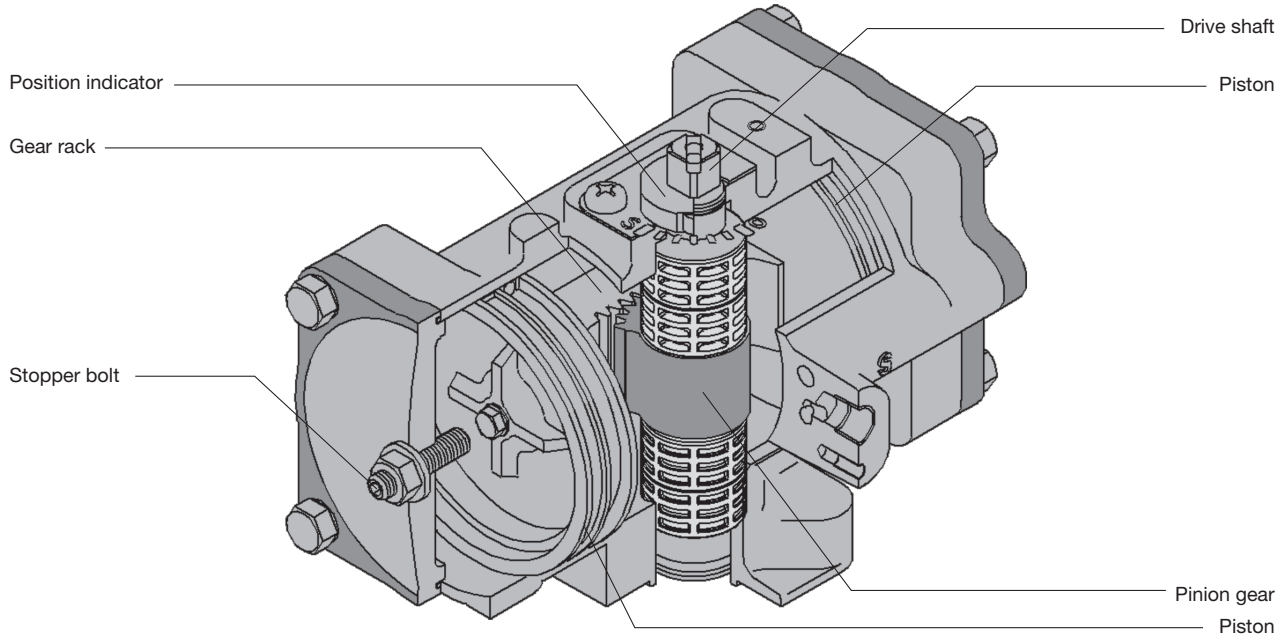


## Featured by the utmost handling ease and extended service life with high operational efficiency

### Easy answers to engineering modification requirements

- Position indicator can be adjusted by 90°, when actuator mounting position is turned by 90°, for local piping or operating convenience.
- Actuator shaft rotating angle (valve opening/closing range) can be adjusted with optional longer stopper bolt to full 90° rotation for plus/minus 7°.
- Standard AIR-FAIL-CLOSE mode can be converted to AIR-FAIL-OPEN mode by means of mounting of spring cartridge on the actuator housing reverse end. (spring-return type only)
- Replacing modular units of blowoff-proof spring cartridge enables accommodation of higher output torque or lower operating pressure. (spring-return type only)
- Valve actuation mode is convertible between double-action and spring-return with addition or deletion of spring cartridge.

### Economic advantage

Use of monobloc casting of piston-rack assembly results in reduced housing dimensions by 10% to 15% (compared with KITZ D Series actuators), and saves air consumption for valve actuation.

### Extended service life with monobloc casting of two pistons and a gear-rack

Pitch line of a gear-rack is positioned in the center of actuator housing, and two pistons are cast in integration with gear-rack as one-piece unit. This helps to keep piston position in parallel during actuator travel.

### Light and compact housing

Employment of diecast aluminum for housings and piston-rack assemblies has reduced the actuator weight by 20% to 40% (compared with KITZ D Series actuators) for better torque-to-weight ratio.

### Conformity to international standards

NAMUR VDI/VDE 3845 designs are used for tubeless mounting of solenoid valve and switchbox on actuator housing besides the conformity to ISO 5211 requirements for valve mounting flanges. The stem top design also conforms to NAMUR dimensions.

### Actuators can be directly mounted to KITZ DJ, XJ Series Butterfly Valves

### Optional adaptors (connectors) to the valves on the bottom of actuators can be provided for wide mounting variations

## Type FAS (Spring-Return)

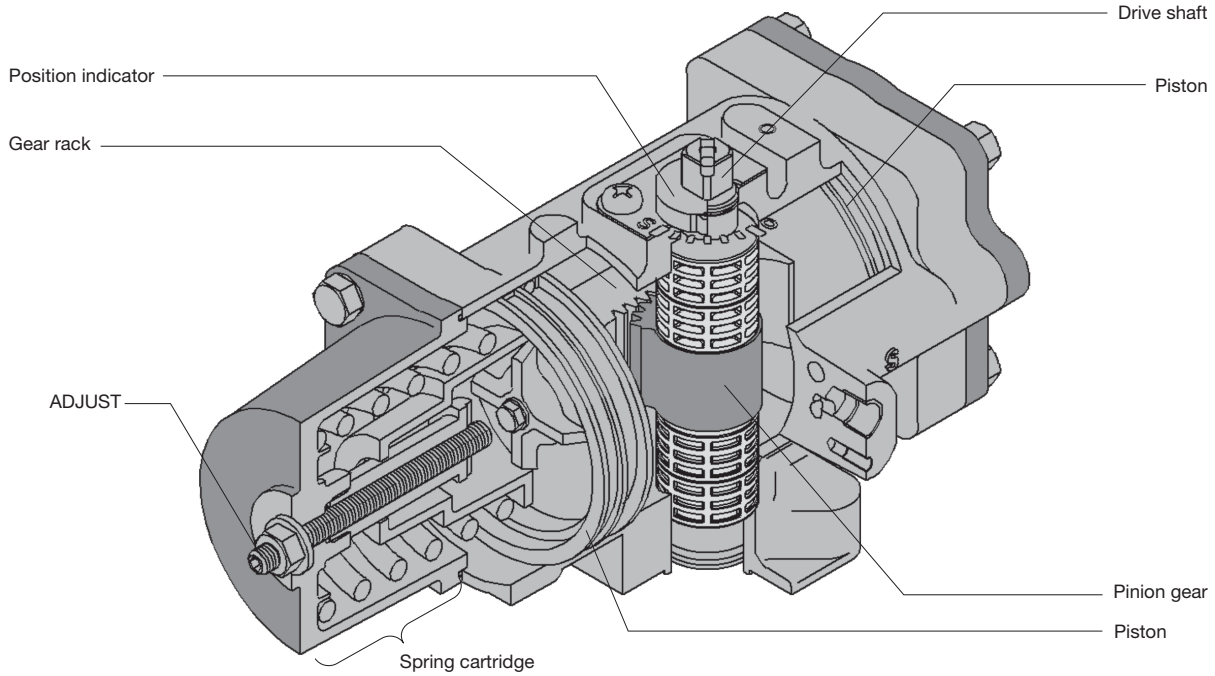


## Double - action(FA)

unit : N・m

| Type | Operation pressure (air) | | |
|---|---|---|---|
| | 0.3MPa | 0.4MPa | 0.5MPa |
| FA-1 | 14.1 | 18.8 | 23.5 |
| FA-2 | 33.4 | 44.5 | 55.7 |
| FA-3 | 67.4 | 89.8 | 112 |
| FA-4 | 134 | 179 | 223 |
| FA-5 | 249 | 332 | 415 |
| FA-6 | 588 | 784 | 980 |

## Spring - return(FAS)

unit : N・m

| Type | Type of spring | Operation pressure (air) | | | | | | Driven by spring | |
|---|---|---|---|---|---|---|---|---|---|
| | | 0.3MPa | | 0.4MPa | | 0.5MPa | | | |
| | | 0° ※1 | 90° ※2 | 0° ※1 | 90° ※2 | 0° ※1 | 90° ※2 | 0° ※3 | 90° ※4 |
| FAS-1 | 3K | 9.3 | 6.5 | 14.1 | 11.3 | 18.9 | 16.1 | 5.2 | 7.9 |
| | 4K | — | — | 11.7 | 7.6 | 16.5 | 12.5 | 7.6 | 11.6 |
| | 5K | — | — | — | — | 14.6 | 9.6 | 9.4 | 14.5 |
| FAS-2 | 3K | 20.2 | 13.7 | 31.3 | 24.8 | 42.5 | 36.0 | 13.2 | 19.7 |
| | 4K | — | — | 26.8 | 18.0 | 37.9 | 29.2 | 17.8 | 26.5 |
| | 5K | — | — | — | — | 33.4 | 22.4 | 22.3 | 33.2 |
| FAS-3 | 3K | 42.8 | 32.7 | 64.0 | 52.9 | 87.2 | 75.1 | 23.7 | 35.8 |
| | 4K | — | — | 53.5 | 35.5 | 75.7 | 57.7 | 35.2 | 53.1 |
| | 5K | — | — | — | — | 66.8 | 44.4 | 44.1 | 66.4 |
| FAS-4 | 3K | 83.0 | 59.4 | 129 | 106 | 175 | 152 | 55.6 | 79.1 |
| | 4K | — | — | 110 | 74.6 | 157 | 121 | 74.3 | 110 |
| | 5K | — | — | — | — | 138 | 93.2 | 93.1 | 138 |
| FAS-5 | 3K | 155 | 109 | 240 | 194 | 325 | 279 | 101 | 147 |
| | 4K | — | — | 203 | 138 | 288 | 222 | 138 | 203 |
| | 5K | — | — | — | — | 255 | 171 | 171 | 254 |
| FAS-6 | 3K | 354 | 249 | 551 | 446 | 748 | 643 | 237 | 342 |
| | 4K | — | — | 473 | 326 | 670 | 510 | 326 | 475 |
| | 5K | — | — | — | — | 591 | 392 | 394 | 593 |

※1. Operation pressure : Start ※2. Operation pressure : End ※3. Spring : End ※4. Spring : Start

# Specifications and Dimensions

| | | |
|---|---|---|
| Operating medium | : | Compressed instrument air or nitrogen gas |
| Operating pressure | : | Standard operating pressure 0.4 MPa |
| Operating pressure range | : | 0.3 MPa to 0.7 MPa * |
| Cylinder test pressure | : | 0.97 MPa |
| Shaft rotating angle | : | 90°±7° |
| Service temperature | : | −20°C to ＋80°C (Supplied air should not be frozen.) |
| Opening degree indication | : | Indicator has 15 degree graduation (0 to 90°) |
| Valve mounting flange | : | ISO 5211 |
| Accessory mounting connection | : | NAMUR VDI/VDE 3845 |
| Coating | : | Baked Polyester Resin Coating |

＊Be consulted by KITZ for non-standard operating pressure.

## Type FA (Double-action)

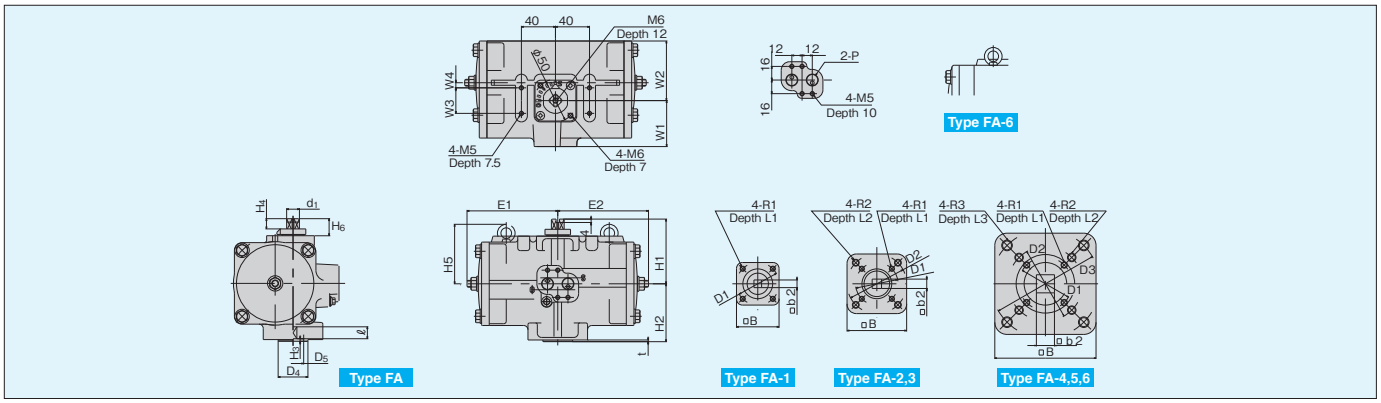


## Type FA Dimensions

unit : mm

| Type | $E_1$ | $E_2$ | $W_1$ | $W_2$ | $W_3$ | $W_4$ | $H_1$ | $H_2$ | $H_3$ | $H_4$ | $H_5$ | $H_6$ | $D_1$ | $D_2$ | $D_3$ | $D_4$ | $D_5$ | $d_1$ | $b_1$ | $b_2$ | B | ℓ | t | $R_1 \times L_1$ | $R_2 \times L_2$ | $R_3 \times L_3$ | P |
|---|---|---|---|---|---|---|---|---|---|---|---|---|---|---|---|---|---|---|---|---|---|---|---|---|---|---|---|
| FA-1 | 87 | 87 | 50 | 54 | 30 | 0 | 70 | 55 | 3 | 12 | — | 20 | 50 | — | — | 35 | 25 | 15 | 12 | 9 | 50 | 16 | 2 | M6 × 9 | — | — | BSPT1/4 |
| FA-2 | 107 | 107 | 54 | 70 | 30 | 6 | 80 | 68 | 3 | 12 | — | 20 | 50 | 70 | — | 35 | 30 | 15 | 12 | 11 | 70 | 16 | 2 | M6 × 9 | M8 × 12 | — | BSPT1/4 |
| FA-3 | 128 | 128 | 57 | 87 | 30 | 13 | 86 | 78 | 3 | 12 | — | 20 | 50 | 70 | — | 35 | 32 | 21 | 17 | 13 | 70 | 25 | 2 | M6 × 9 | M8 × 12 | — | BSPT1/4 |
| FA-4 | 160 | 160 | 68 | 111 | 30 | 21 | 108 | 96 | 4 | 12 | — | 20 | 50 | 70 | 102 | 55 | 40 | 21 | 17 | 17 | 95 | 27 | 3 | M6 × 9 | M8 × 12 | M10×15 | BSPT1/4 |
| FA-5 | 208 | 208 | 78 | 135 | 30 | 30 | 132 | 116 | 5 | 20 | — | 30 | 70 | 102 | 125 | 55 | 50 | 29 | 23 | 27 | 113 | 34 | 3 | M8×12 | M10×15 | M12×18 | BSPT1/4 |
| FA-6 | 268 | 268 | 101 | 178 | 30 | 45 | 152 | 125 | 5 | 20 | 157 | 30 | 70 | 102 | 125 | 70 | 60 | 41 | 32 | 27 | 134 | 34 | 3 | M8×12 | M10×15 | M12×18 | BSPT1/4 |

## Type FAS (Spring-return)

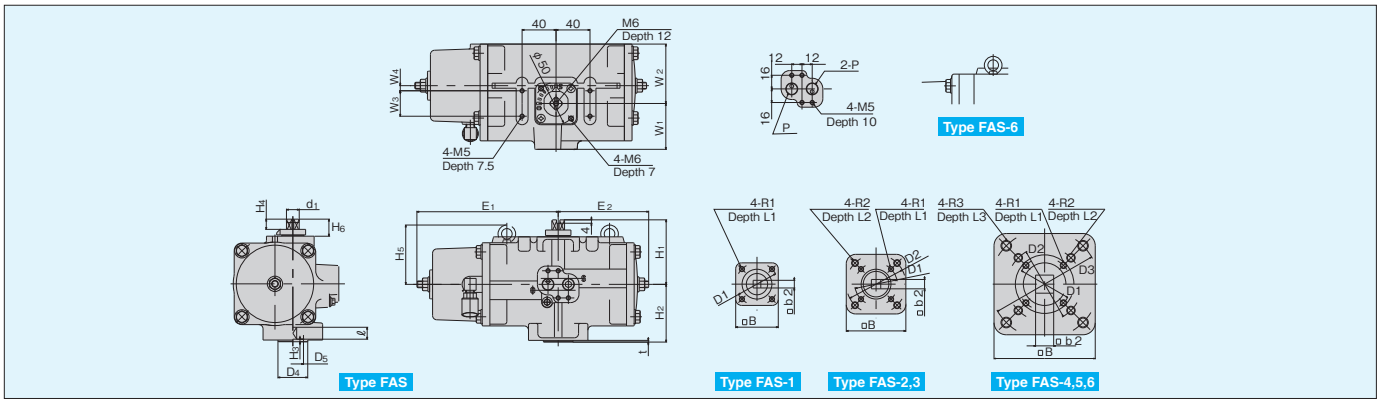


## Type FAS Dimensions

unit : mm

| Type | $E_1$ | $E_2$ | $W_1$ | $W_2$ | $W_3$ | $W_4$ | $H_1$ | $H_2$ | $H_3$ | $H_4$ | $H_5$ | $H_6$ | $D_1$ | $D_2$ | $D_3$ | $D_4$ | $D_5$ | $d_1$ | $b_1$ | $b_2$ | B | ℓ | t | $R_1 \times L_1$ | $R_2 \times L_2$ | $R_3 \times L_3$ | P |
|---|---|---|---|---|---|---|---|---|---|---|---|---|---|---|---|---|---|---|---|---|---|---|---|---|---|---|---|
| FAS-1 | 132 | 87 | 50 | 54 | 30 | 0 | 70 | 55 | 3 | 12 | — | 20 | 50 | — | — | 35 | 25 | 15 | 12 | 9 | 50 | 16 | 2 | M6 × 9 | — | — | BSPT1/4 |
| FAS-2 | 166 | 107 | 54 | 70 | 30 | 6 | 80 | 68 | 3 | 12 | — | 20 | 50 | 70 | — | 35 | 30 | 15 | 12 | 11 | 70 | 16 | 2 | M6 × 9 | M8 × 12 | — | BSPT1/4 |
| FAS-3 | 203 | 128 | 57 | 87 | 30 | 13 | 86 | 78 | 3 | 12 | — | 20 | 50 | 70 | — | 35 | 32 | 21 | 17 | 13 | 70 | 25 | 2 | M6 × 9 | M8 × 12 | — | BSPT1/4 |
| FAS-4 | 290 | 160 | 68 | 111 | 30 | 21 | 108 | 96 | 4 | 12 | — | 20 | 50 | 70 | 102 | 55 | 40 | 21 | 17 | 17 | 95 | 27 | 3 | M6 × 9 | M8 × 12 | M10×15 | BSPT1/4 |
| FAS-5 | 363 | 208 | 78 | 135 | 30 | 30 | 132 | 116 | 5 | 20 | — | 30 | 70 | 102 | 125 | 55 | 50 | 29 | 23 | 27 | 113 | 34 | 3 | M8×12 | M10×15 | M12×18 | BSPT1/4 |
| FAS-6 | 483 | 268 | 101 | 178 | 30 | 45 | 152 | 125 | 5 | 20 | 157 | 30 | 70 | 102 | 125 | 70 | 60 | 41 | 32 | 27 | 134 | 34 | 3 | M8×12 | M10×15 | M12×18 | BSPT1/4 |

# Operating Mechanism

## Type FA (Double-action)

(1) Air pressure supplied into the chamber **A** through port ①, pushes gear rack with two pistons outward, and discharges the air residue (chamber **B**) through port ②.
(2) The gear rack rotates the pinion gear and the shaft counter-clockwise, to drive the valve.
(3) Reverse supply of the air pressure activates reverse valve operation.

## Type FAS (Spring-return)

(1) Air pressure supplied into the chamber **A** through port ①, pushes gear rack with two pistons outward, compresses the spring and discharges the air residue through port ②.
(2) The gear rack rotates the pinion gear and the shaft counter-clockwise, to drive the valve.
(3) At the moment the air in the chamber **A** is discharged through the solenoid valve, the spring force pushes the pistons to the reverse direction, and the gear rack activates rotation of the shaft clockwise to reversely operate the valve.

### Cylinder volume

unit : ℓ

| Type | Chamber A | Chamber B |
|---|---|---|
| FA-1 | 0.15 | 0.15 |
| FA-2 | 0.31 | 0.31 |
| FA-3 | 0.61 | 0.61 |
| FA-4 | 1.29 | 1.29 |
| FA-5 | 2.29 | 2.29 |
| FA-6 | 5.27 | 5.27 |

### Cylinder volume

unit : ℓ

| Type | Chamber A |
|---|---|
| FAS-1 | 0.15 |
| FAS-2 | 0.31 |
| FAS-3 | 0.61 |
| FAS-4 | 1.29 |
| FAS-5 | 2.29 |
| FAS-6 | 5.27 |

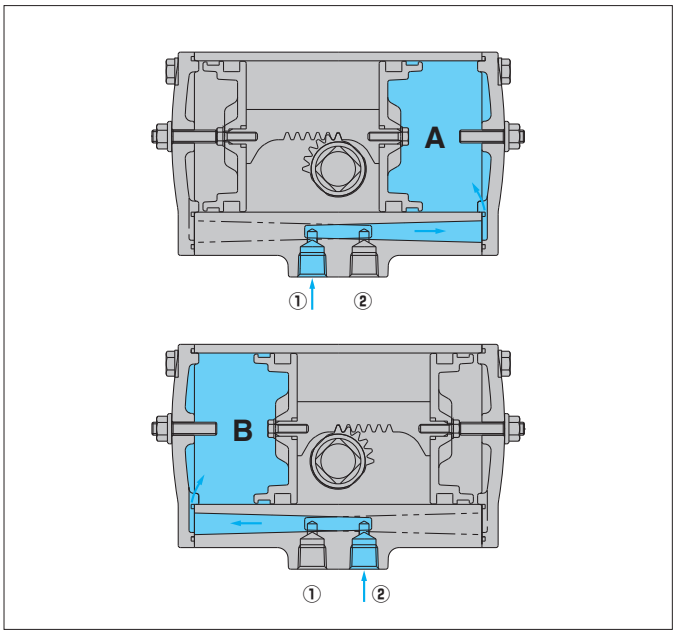


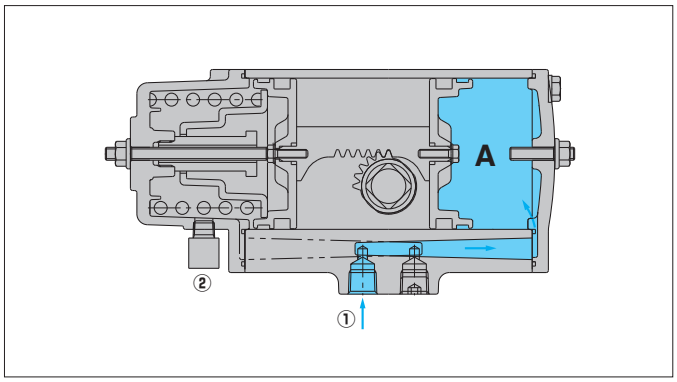

# Actuator Sizing

The sizing shown below is based on the following conditions.

## Ball valves

| | |
|---|---|
| Operating pressure | 0.4 MPa |
| Fluid type | · Fresh water or lubricant, Max. 1.0 MPa<br>(＊The figures shown in the table indicate service pressure limit. Unit MPa)<br>· Air gas or steam, Max. 0.7 MPa |
| Fluid temperature | –20°C to +230°C (Limited within seat rating) |

Be consulted by KITZ, if:
① Valves handle
a. Solvents, such as kerosene, naphtha or alcohol.
b. Powder, slurry or dehydrated cake.
c. Vacuum or any other service requiring oil free treatment.
② Valves are not operated for more than 3 months.
③ Valves are used as a control valve.

## Butterfly valves

| | |
|---|---|
| Operating pressure | 0.4 MPa |
| Fluid type | Smooth fluid<br>• Fresh water, lubricant (Max 1,000 cp) |
| Velocity | Up to 2 m/sec |
| Fluid temperature | 0°C to Max. working temperature |

Type, temperature and pressure of the fluid shall be determined by the rubber seat. Valve selection must properly be made based on these conditions.

Extra care shall be taken on velocity, if valves are used at the pump exit.

## Type FA (Double-action)

| Type | Bore | Shell Material | Class | Conection | Size / Product coding | A | 10 | 15 | 20 | 25 | 32 | 40 | 50 | 65 | 80 | 100 | 125 | 150 | 200 | 250 | 300 |
|---|---|---|---|---|---|---|---|---|---|---|---|---|---|---|---|---|---|---|---|---|---|
| | | | | | | B | 3/8 | 1/2 | 3/4 | 1 | 1 1/4 | 1 1/2 | 2 | 2 1/2 | 3 | 4 | 5 | 6 | 8 | 10 | 12 |
| Ball Valve | Full Bore | Cast Iron | JIS 10K | Threaded | 10FCT | | | | | | | | | | | | | | | | |
| | | | | Flanged | 10FCTB | | | | | | | | | | | | FA-5 | | FA-6 | | |
| | | Ductile Iron | | | 10STBF | | | | | | | | | | | | | | | | |
| | | Stainless Steel | | Threaded | 10UT | | | | | | | | | | | | | | | | |
| | | | JIS 10K Class 150 | Flanged | 10/150UTB, 10/150UTDZ | | | | FA-1 | | | FA-2 | | FA-3 | FA-4 | | | | FA-6 | | |
| | | | JIS 20K Class 300 | | 20/300UTDZ | | | | | | | | | | | | | FA-6* | | | |
| | | Carbon Steel | JIS 10K Class 150 | | 10/150SCTDZ | | | | | | | | | | | | FA-5 | | FA-6 | | |
| | | | JIS 20K Class 300 | | 20/300SCTDZ | | | | | | | | | | | | | | | | |
| | Reduced Bore | Stainless Steel | JIS 10K Class 150 | Flanged | 10UTR · 150UTR | | | | | | | | | | FA-3 | | | | | FA-6 | |
| | | | JIS 20K Class 300 | | 20UTR · 300UTR | | | | | | | | | | | | | | FA-6 | | |
| | | Carbon Steel | Class 150 | | 150SCTR | | | | | | | | | | | | FA-4 | | | FA-6 | |
| | | | Class 300 | | 300SCTR | | | | | | | | | | | | | | FA-6 | | |
| | Full Bore (3 way) | Stainless Steel | JIS 10K | Flanged | 10UTB4T (L) A | | | | FA-2 | | | FA-3 | FA-4 | | FA-5 | FA-6 | | | | | |
| | Full Bore (PFA Lining) | | | | 10UTBLN | | | | FA-1 | | | FA-2 | | FA-3 | FA-4 | | | | | | |
| Butterfly Valve | | Aluminum | JIS 10K | Wafer | 10XJME | | | | | | | | | | | | | | | | |
| | | | | | 10XJSME | | | | | | | FA-1 | | | FA-2 | | FA-3 | | FA-4 | FA-5 | FA-6 |
| | | Ductile Iron | | | 10DJ | | | | | | | | | | | | | | | | |
| | | | JIS 16K BS PN16 | | 16DJ, PN16DJ | | | | | | | | | | | | | FA-4 | FA-5 | | |

*FA-5 for TDZ.

# Actuator Sizing

## Type FAS (Spring-Return)

| Type | Bore | Shell Material | Class | Conection | Size / Product coding | A | 10 | 15 | 20 | 25 | 32 | 40 | 50 | 65 | 80 | 100 | 125 | 150 | 200 | 250 | 300 |
|---|---|---|---|---|---|---|---|---|---|---|---|---|---|---|---|---|---|---|---|---|---|
| | | | | | | B | ⅜ | ½ | ¾ | 1 | 1¼ | 1½ | 2 | 2½ | 3 | 4 | 5 | 6 | 8 | 10 | 12 |
| Ball Valve | Full Bore | Cast Iron | JIS 10K | Threaded | 10FCT | | | | | | | | | | | | | | | | |
| | | | | Flanged | 10FCTB | | | | | | | | | | | | FAS-6 | | | | |
| | | Ductile Iron | | | 10STBF | | | | | | | | | | | | | | | | |
| | | Stainless Steel | | Threaded | 10UT | | | | | | | | | | | | | | | | |
| | | | JIS 10K Class 150 | Flanged | 10/150UTB, 10/150UTDZ | | | FAS-1 | | FAS-2 | | FAS-3 | FAS-4 | | FAS-5 | | FAS-6 | | | | |
| | | | JIS 20K Class 300 | | 20/300UTDZ | | | | | | | | | | | * | | | | | |
| | | Carbon Steel | JIS 10K Class 150 | | 10/150SCTDZ | | | | | | | | | | | | | | | | |
| | | | JIS 20K Class 300 | | 20/300SCTDZ | | | | | | | | | | | | | | | | |
| | Reduced Bore | Stainless Steel | JIS 10K Class 150 | Flanged | 10UTR · 150UTR | | | | | | | | | | | | | FAS-6 | | | |
| | | | JIS 20K Class 300 | | 20UTR · 300UTR | | | | | | | | FAS-3 | | | | | | | | |
| | | Carbon Steel | Class 150 | | 150SCTR | | | | | | | | | | | | FAS-5 | | | | |
| | | | Class 300 | | 300SCTR | | | | | | | | | | | | | | | | |
| | Full Bore (3 way) | Stainless Steel | JIS 10K | Flanged | 10UTB4T (L) A | | | FAS-2 | FAS-3 | | | FAS-4 | FAS-5 | FAS-6 | | | | | | | |
| | Full Bore (PFA Lining) | | | | 10UTBLN | | | FAS-1 | | FAS-2 | | FAS-3 | FAS-4 | | FAS-5 | | | | | | |
| Butterfly Valve | | Aluminum | JIS 10K | Wafer | 10XJME | | | | | | | FAS-2 | | FAS-3 | | FAS-4 | | FAS-5 | FAS-6 | | |
| | | | | | 10XJSME | | | | | | | | | | | | | | | | |
| | | Ductile Iron | | | 10DJ | | | | | | | | | | | | | | | | |
| | | | JIS 16K BS PN16 | | 16DJ, PN16DJ | | | | | | | | | | | | | | | | |

Note : The standard combination of UTDZ/SCTDZ size 20[A] (¾[B]) is FAS-2

*FAS-5 for TDZ.

## Construction Details

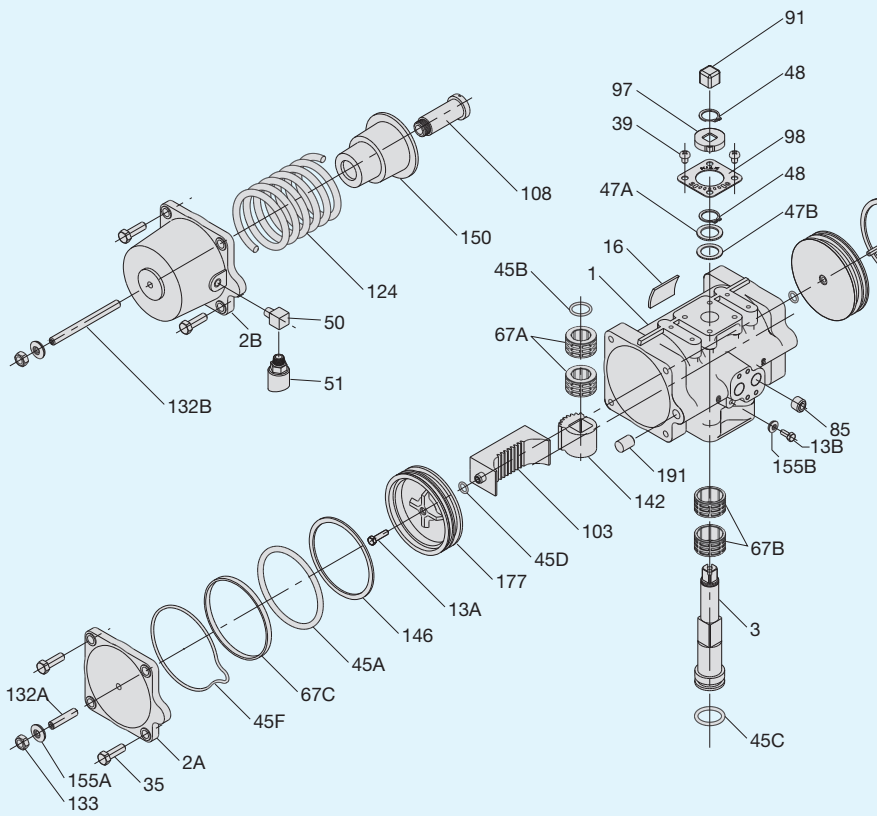


| Part No. | Part |
|---|---|
| 1 | Housing |
| 2A | End cover |
| 2B* | Spring cover |
| 3 | Shaft |
| 13A | Bolt |
| 13B | Bolt |
| 16 | Name plate |
| 35 | Bolt |
| 39 | Screw |
| 45A | O-ring |
| 45B | O-ring |
| 45C | O-ring |
| 45D | O-ring |
| 45F | O-ring |
| 47A | Thrust washer |
| 47B | Thrust bearing |
| 48 | Snap ring |
| 50* | Breathing plug |
| 51* | Mizukiller |

* Spring-Return type.

| Part No. | Part |
|---|---|
| 67A | Bearing |
| 67B | Bearing |
| 67C | Piston bearing |
| 85* | Plug |
| 91 | Shaft cap |
| 97 | Indicator |
| 98 | Indicator plate |
| 103 | Gear rack |
| 108* | Retainer guide |
| 124* | Spring |
| 132A | Adjust bolt |
| 132B* | Adjust bolt |
| 133 | Nut |
| 142 | Pinion gear |
| 146 | Back-up ring |
| 150* | Spring retainer |
| 155A | Seal washer |
| 155B | Seal washer |
| 177 | Piston |
| 191 | Rubber plug (FAS-6 only) |

## Optional Accessories

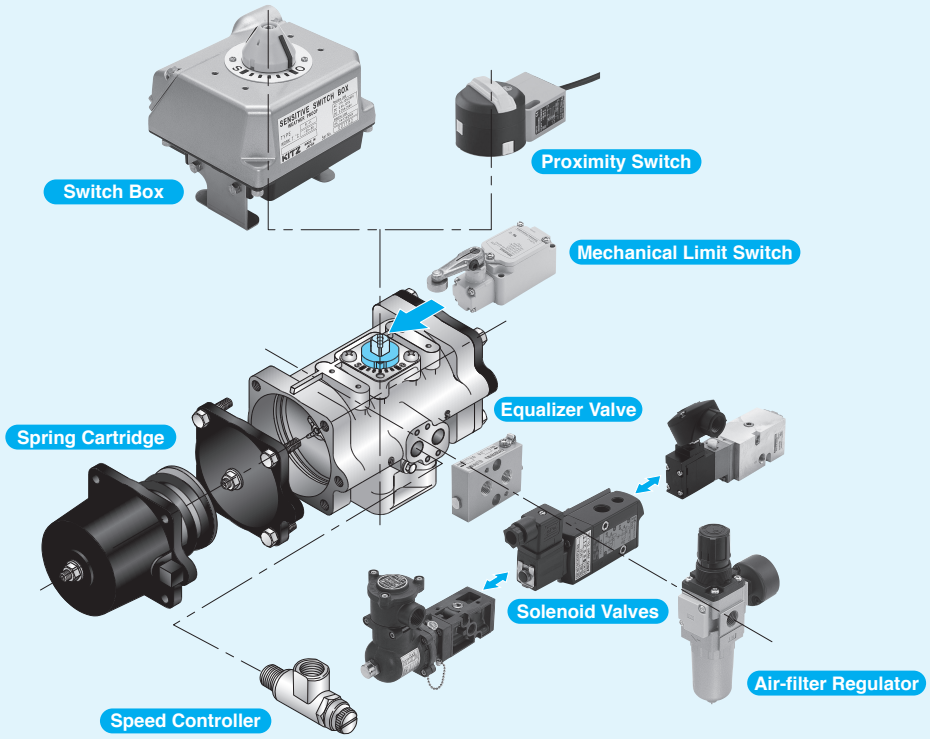

## Valve and Actuator Handling Instructions

1. Before installing valves on pipelines, remove welding chips, scales and other foreign objects from the ports; flush the insides thoroughly.
2. Both pneumatically operated ball and butterfly valves can be installed horizontally or vertically. Fluid can be discharged from either port. However, air filters and lubricators attached to actuators should be correctly positioned in consideration of the weight of actuators which may cause an extra stress on the pipeline.
3. For convenience of maintenance service, provide an adequate space around valves, such as 300 mm above, 500 mm below, and 300 mm wide from the sides.
4. Ambient temperatures allowable for actuators ranges between –20°C and +60°C. Valves should be adequately protected if the ambient temperature exceeds this range.
5. If a pipeline vibrates, take appropriate prevention measures.
6. In corrosive atmospheres such as $SO_2$ or $Cl_2$, corrosive gas should not be intruded into the air supply.
7. Use air compressors and air reservoirs with a capacity of 130% of the piping capacity and air consumption.
   The maximum supply air pressure for KITZ B Series actuators is 0.7 MPa (or 100 psi).
8. During the initial operation, or after suspension of operation exceeding 3 month, operating torque may exceed the specified level. In these cases, actuators should be manually operated several times before starting pneumatic activation.

## Precautions

**⚠CAUTION**

- Ensure to read and follow instructions of operation manual when handling F Series actuators.
- Ensure to select F Series actuators in consideration of specifications of this catalog.
- Refer to the valve catalogs for detailed specifications of the valves to mount actuators.
- Cylinder bodies of double-action type and spring-return type are interchangeable. Double-action type can be converted to spring return type by changing spring cartridge.
- Actuator sizing may differ for the particular service conditions when converting double-action type to spring-return type. Contact KITZ Corporation for proper sizing.
- Standard operating pressure built-in spring return type is 4K. (0.4 to 0.7 MPa)
- Spring cartridge with different operating pressures 3K (0.3 to 0.7 MPa) and 5K (0.5 to 0.7 MPa) is optionally available. Contact KITZ Corporation for actuator sizing of 3K and 5K types.
- Do not use excessive operating pressures to actuators, which will damage internal parts and result in malfunction.
- Ensure to use compressed instrumentation air or nitrogen gas as operating medium.
- It will damage internal and external parts to use actuators under corrosive environments.
  1. Holding valve position
     KITZ pneumatic actuators do not assure no leakage. Actuators do not hold valve positions long time without continuous air supply. If you need to hold valve position long time without continuous air supply, contact KITZ Corporation or its distributors.
  2. Internal air residue of spring-return type actuators
     Output torques of spring-return type actuators indicate valves without internal air residue remains inside their cylinders. Please design your systems to be able to exhaust internal air residue at spring-return action. If internal air residue remains in the cylinders, the output torque will be small and valves do not open or close by spring-return action.
- Air supply inlet threads are BSPT$^1/_4$ as standard. Ensure to use piping tubes which diameters are $\phi$6 and smaller. Contact KITZ Corporation to reduce operating time with larger diameter piping tube.
- It is recommended to use KITZ standard accessories for F Series actuators.

## ⚠CAUTION

- Ensure to select solenoid valves suitable for the service conditions.
- Specify piping positions when using actuated valves with positioners since piping positions may make opening slip.
- A part to avoid water to enter into a spring case (“Mizukiller”) is installed on spring-return type actuator’s breathing port. And the Mizukiller is sealed with a sticker. Remove the sticker before running automated operation.
  (For products shipped before December 2009, a cap is installed on spring-return type actuator’s breathing port instead of the Mizukiller. Remove the cap before running automated operation. If the cap remains, actuator speed may become slow.)
- When Type FAS spring-return actuator is used outside or in wet condition, the Mizukiller has to be installed into it. If the Mizukiller is not installed, water may enter into a spring cartridge and cause a malfunction.

## ⚠WARNING

- Spring cartridge for spring-return type has strongly compressed built-in spring. Careful handling of spring cartridge is required to avoid its blowing out. Do not loosen stopper bolt of spring cartridge.
- Do not remove end covers and spring covers or disassemble actuators while they are pressurized.

## ⚠DISCLAIMER

- KITZ does not take any responsibilities for damages arising from a result of natural disasters, accidents or fire which KITZ is not liable for, conduct of a third party, intentional act, misuse or use under abnormal conditions by a customer.

- KITZ does not take any responsibilities for damages arising from negligence of the prohibitions and cautions given in the catalogs and operation manuals, or installation and usage beyond the specification range.

- KITZ does not take any responsibilities for damages arising from product modification not entrusted to KITZ or usage under the load applied from other devices.

# CAUTION

Pressure-temperature ratings and other performance date published in this catalog have been developed from our design calculation, in-house testing, field reports provided by our customers and/or published official standards or specifications. They are good only to cover typical applications as a general guideline to users of KITZ products introduced in this catalog.

For any specific application, users are kindly requested to contact KITZ Corporation for technical advice, or to carry out their own study and evaluation for proving suitability of these products to such an application. Failure to follow this request could result in property damage and/or personal injury, for which we shall not be liable.

While this catalog has been compiled with the utmost care, we assume no responsibility for errors, impropriety or inadequacy. Any information provided in this catalog is subject to from-time-to-time change without notice for error rectification, product discontinuation, design modification, new product introduction or any other cause that KITZ Corporation considers necessary. This edition cancels all previous issues.

Read instruction manual carefully before use.

# NOTICE

If any products designated as strategic material in the Foreign Exchange and Foreign Trade Law, Cabinet Order Concerning Control of Export Trade, Cabinet order Concerning Control of Foreign Exchange and other related laws and ordinances ("Foreign Exchange Laws") are exported to any foreign country or countries, an export license issued by the Japanese Government will be required under the Foreign Exchange Laws.

Further, there may be cases where an export license issued by the government of the United States or other country will be required under the applicable export-related laws and ordinances in such relevant countries.

The contract shall become effective subject to that a relevant export license is obtained from the Japanese Government.

*A chrysanthemum-handle is a symbol of KITZ,*
*the brand of valve reliability*

ISO 9001 certified since 1989

KITZ

KITZ CORPORATION

Tokyo Shiodome Building,
1-9-1, Higashi-Shimbashi, Minato-ku, Tokyo 105-7305, Japan
Building Facilities and Machinery Equipment Business Unit/Industrial Business Unit
International Sales Department
Phone : +81-50-3649-2202
URL : https://www.kitz.com/en/

— Distributed by —